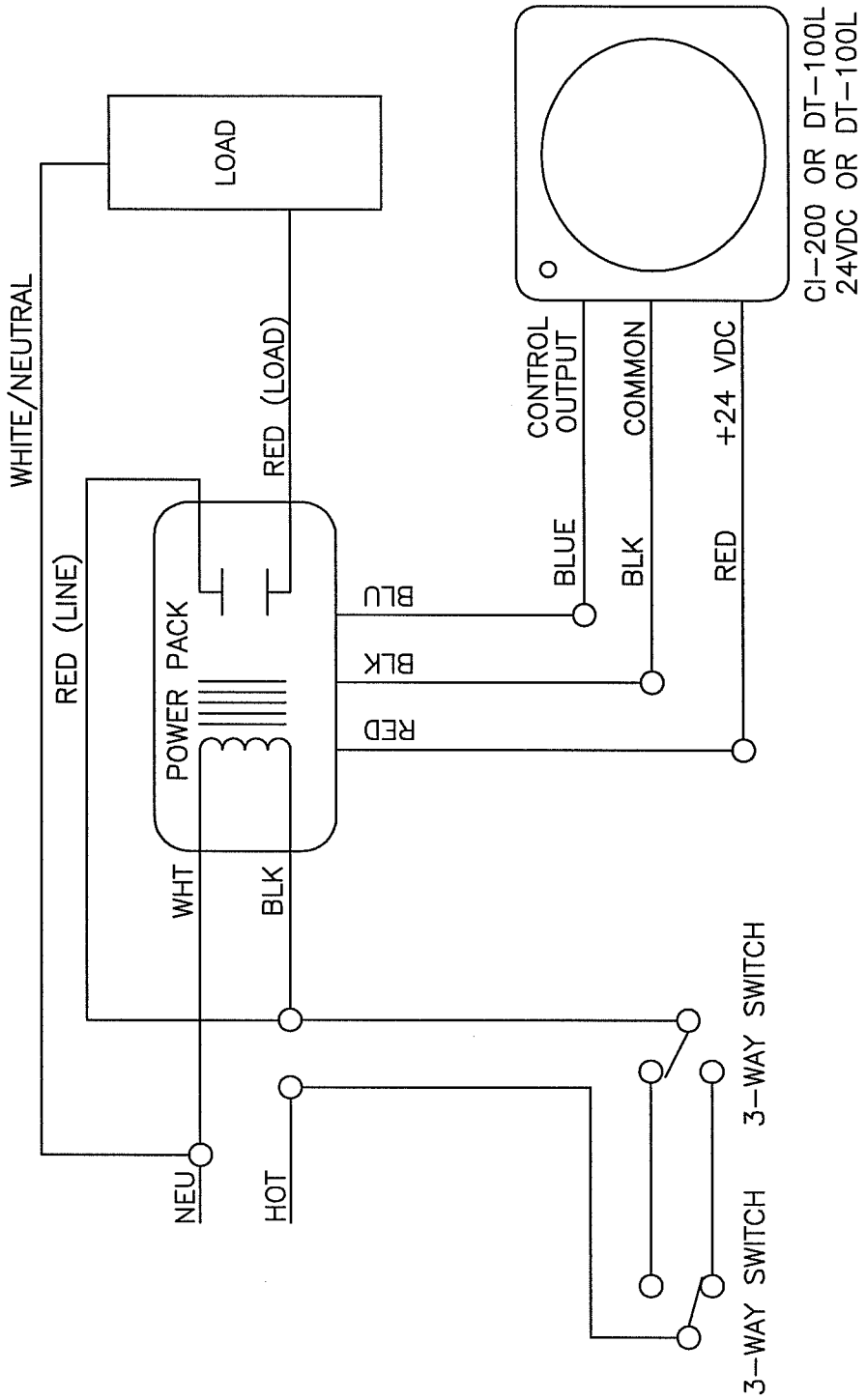

WIRING SCHEME NO.6

LBNL ELECTRICAL STANDARDS
LIGHTING SYSTEM-OCC SENSORS
WIRING SCHEME NO.6

DRAWN BY	DATE
CHECKED BY	
APPROVED BY	
CAD FILE PATH	
SCALE NTS	
DRAWING NO. LT116	SHEET
PROJECT NO.	

UNIVERSITY OF CALIFORNIA LAWRENCE BERKELEY NATIONAL LABORATORY
FACILITIES DIVISION

LBL T:\groups\ELECT\Romy\STD\Lighting\LT116 WIRING SCHEME NO.6.dwg