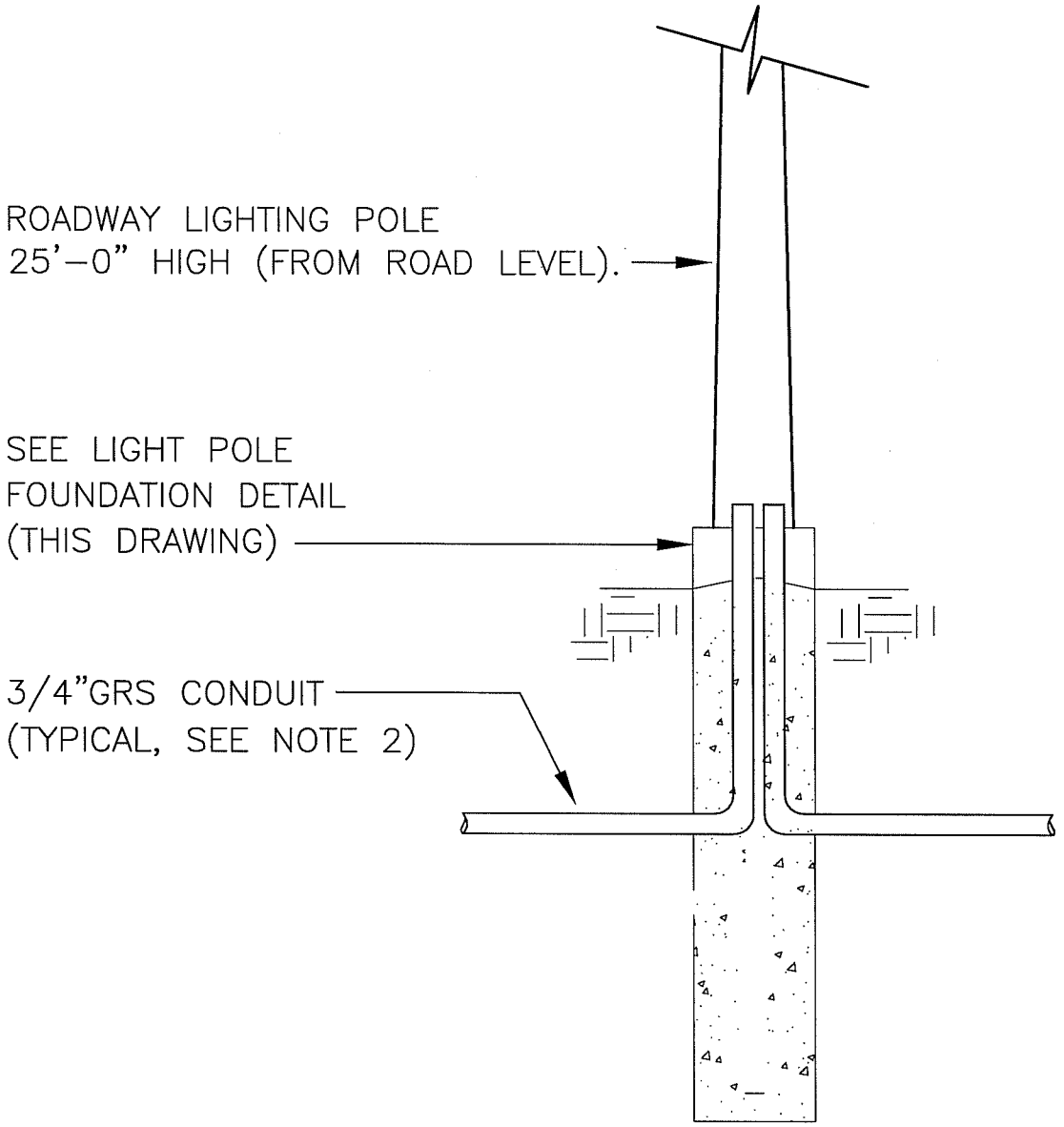

3 E-1, E-2 **DETAIL** SCALE: NONE

LBNL ELECTRICAL STANDARDS ROADWAY LIGHTING DETAILS DETAIL 3	DRAWN BY	DATE
	CHECKED BY	
	APPROVED BY	
	CAD FILE PATH	
	SCALE NTS	
UNIVERSITY OF CALIFORNIA LAWRENCE BERKELEY NATIONAL LABORATORY FACILITIES DIVISION	DRAWING NO. LT102	SHEET
	PROJECT NO.	

T:\groups\ELECT\Romy\STD\Lighting\LT102 Lighting Detail 3.dwg