U.L. SYSTEM NO. WL1054

METAL PIPE THROUGH 2–HR. GYPSUM WALL

F RATING = 2–HR.

T RATING = 0–HR.

FRONT VIEW

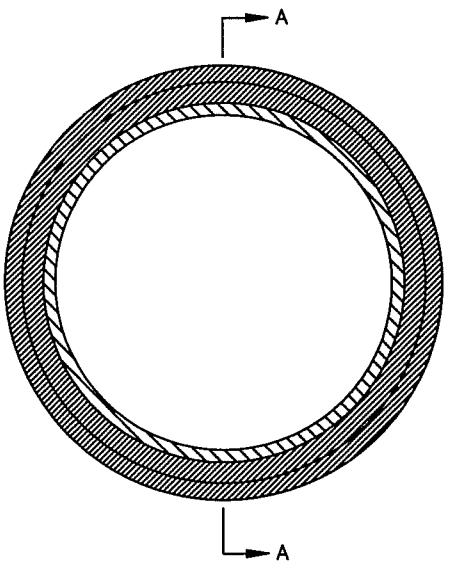

SECTION A–A

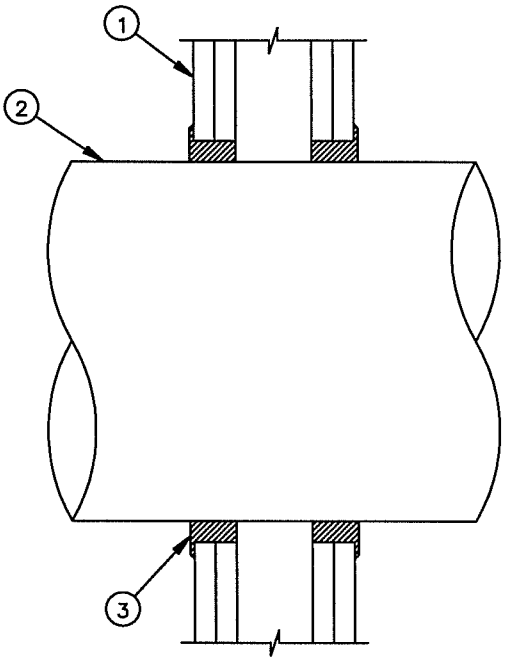

1. 2–HR. FIRE–RATED GYPSUM WALL ASSEMBLY.
2. 10" DIA. (OR SMALLER) STEEL PIPE (SCHEDULE 10 OR HEAVIER), OR 4" DIA. (OR SMALLER) COPPER PIPE, EMT OR STEEL CONDUIT.
3. MINIMUM 1–1/4" DEPTH HILTI FS 601 FIRESTOP SEALANT.

NOTES : 1. MAXIMUM DIAMETER OF OPENING = 12–1/2".
2. ANNULAR SPACE = MIN. 1/4" TO MAX. 1".

30 GYPSUM WALL PENETRATION 2 HOUR

LBNL ELECTRICAL STANDARDS INSTALLATION DETAILS GYPSUM WALL PENETRATION 2 HOUR	DRAWN BY	DATE
	CHECKED BY	
	APPROVED BY	
	CAD FILE PATH	
	SCALE NTS	
UNIVERSITY OF CALIFORNIA LAWRENCE BERKELEY NATIONAL LABORATORY FACILITIES DIVISION	DRAWING NO. INS120	SHEET
	PROJECT NO.	

T:\groups\ELECT\Romy\STD\Installation\INS120 GYPSUM WALL PENETRATION 2 HOUR.dwg