U.L. SYSTEM NO. WL1052

METAL PIPE THROUGH 1-HR. GYPSUM WALL

F RATING = 1-HR.

T RATING = 0-HR.

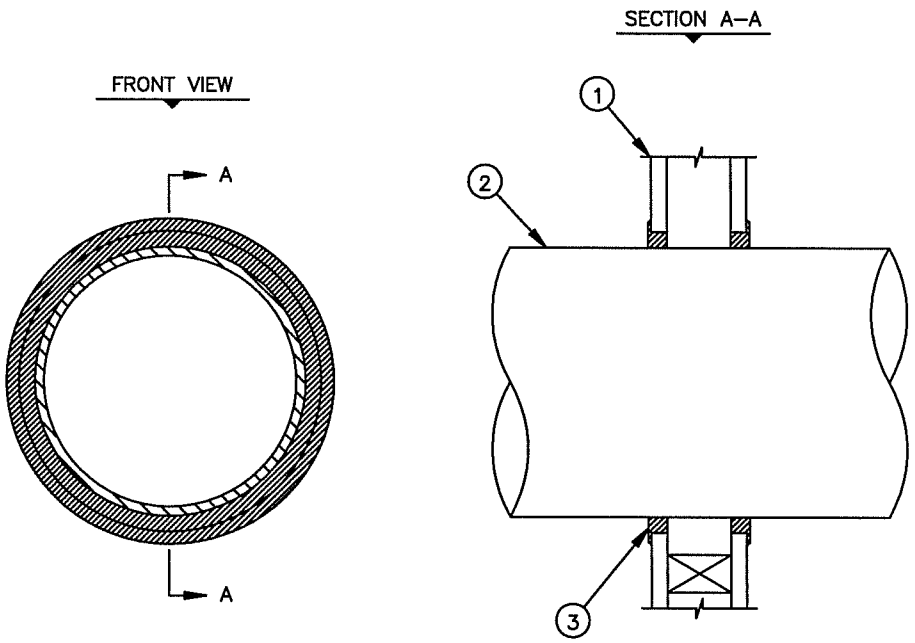

1. 1-HR. FIRE-RATED GYPSUM WALL ASSEMBLY.
2. 10" DIA. (OR SMALLER) STEEL PIPE, 4" DIA. (OR SMALLER) COPPER PIPE, EMT OR CONDUIT.
3. MIN. 5/8" DEPTH HILTI FS 601.

NOTE : NOMINAL ANNULAR SPACE OF 1/4" TO 1" REQUIRED.

29 GYPSUM WALL PENETRATION 1 HOUR

LBNL ELECTRICAL STANDARDS
INSTALLATION DETAILS
GYPSUM WALL PENETRATION 1 HOUR

DRAWN BY	DATE
CHECKED BY	
APPROVED BY	
CAD FILE PATH	
SCALE NTS	
DRAWING NO. INS119	SHEET
PROJECT NO.	

UNIVERSITY OF CALIFORNIA LAWRENCE BERKELEY NATIONAL LABORATORY
FACILITIES DIVISION

T:\groups\ELECT\Romy\STD\Installation\INS119 GYPSUM WALL PENETRATION 1 HOUR.dwg