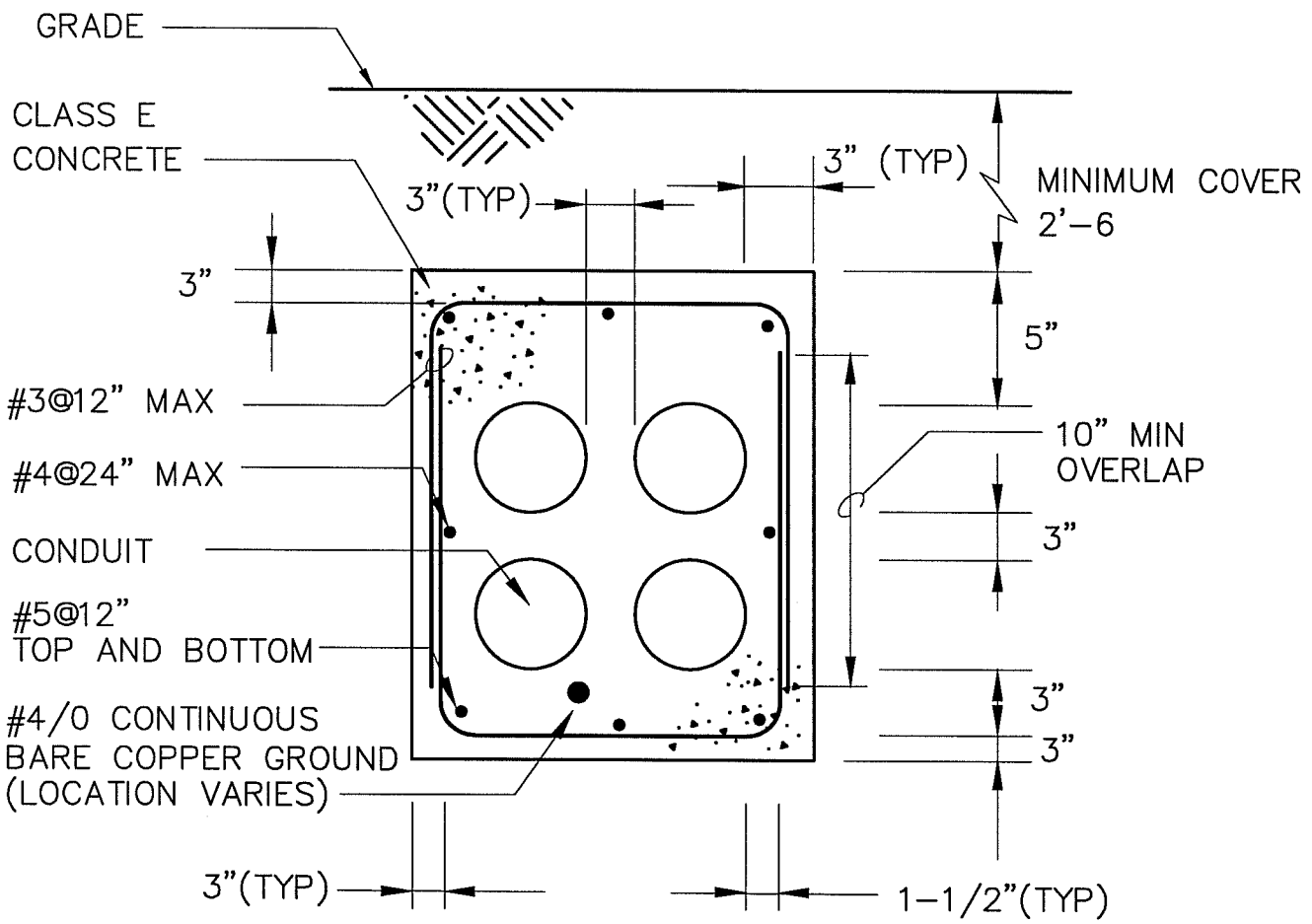

(SITE RUNS DIMENSIONS ARE MINIMUM)

NOTE: PROVIDE 2 INCH RED DYED CONCRETE TOPPING FOR ALL 12KV DUCT BANKS

3 TYPICAL REINFORCED DUCT BANK

LBNL ELECTRICAL STANDARDS INSTALLATION DETAILS TYPICAL REINFORCED DUCT BANK	DRAWN BY	DATE
	CHECKED BY	
	APPROVED BY	
	CAD FILE PATH	
	SCALE NTS	
UNIVERSITY OF CALIFORNIA LAWRENCE BERKELEY NATIONAL LABORATORY FACILITIES DIVISION	DRAWING NO. INS106	SHEET
	PROJECT NO.	

T:\groups\ELECT\Romy\STD\Installation\INS106 TYPICAL REINFORCED DUCT BANK.dwg