AA-30 AUDIBLE ALARM
CLASS A MODULE

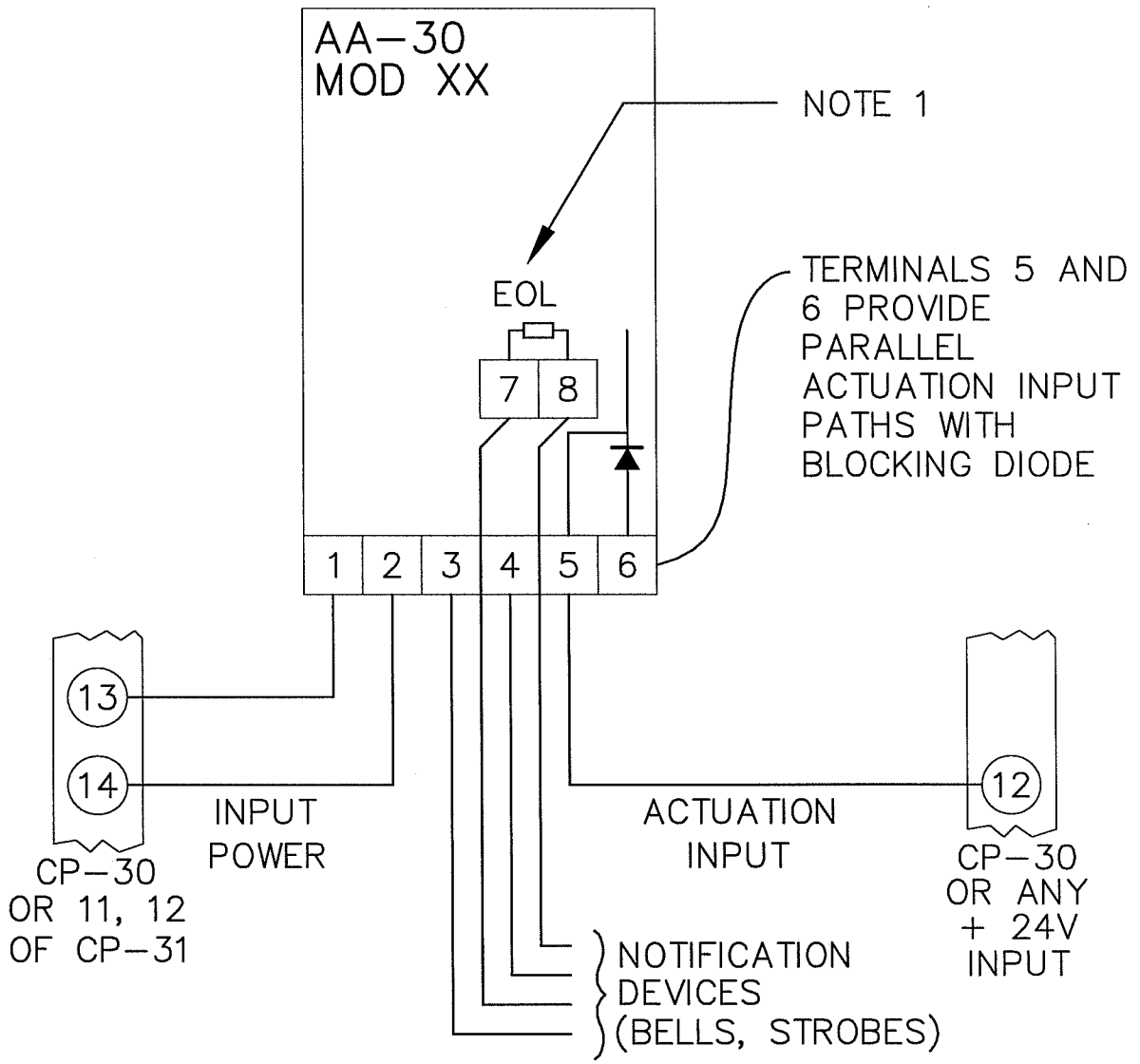

LBNL ELECTRICAL STANDARDS **FIRE ALARM SYSTEM** **AA-30 AUDIBLE ALARM**	DRAWN BY	DATE
	CHECKED BY	
	APPROVED BY	
	CAD FILE PATH	
	SCALE NTS	
UNIVERSITY OF CALIFORNIA LAWRENCE BERKELEY NATIONAL LABORATORY FACILITIES DIVISION	DRAWING NO. FA153	SHEET
	PROJECT NO.	

T:\groups\ELECT\Romy\STD\Fire Alarm\FA153 AA-30 AUDIBLE ALARM.dwg