ZA-30 DUAL ION CLASS A ZONE MODULE

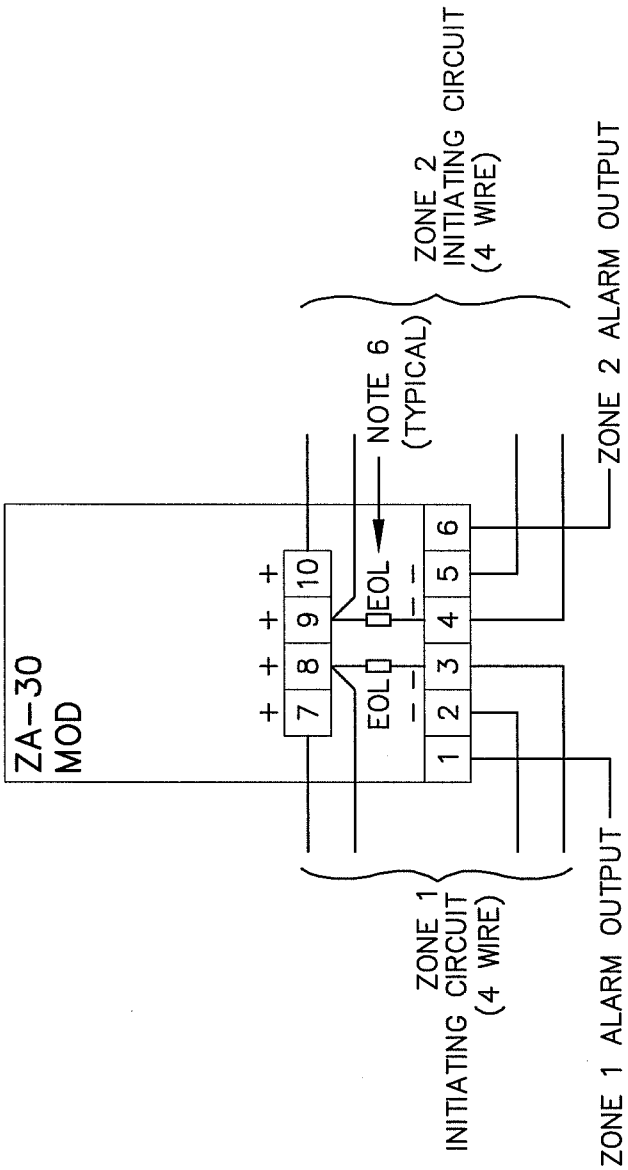

LBNL ELECTRICAL STANDARDS
FIRE ALARM SYSTEM
ZA-30 DUAL ION CLASS A ZONE MODULE

UNIVERSITY OF CALIFORNIA LAWRENCE BERKELEY NATIONAL LABORATORY

FACILITIES DIVISION

DRAWN BY		DATE
CHECKED BY		
APPROVED BY		
CAD FILE PATH		
SCALE NTS		
DRAWING NO. FA140		SHEET
PROJECT NO.		

T:\groups\ELECT\Romy\STD\Fire Alarm\FA140 ZA-30 DUAL ION CLASS A ZONE MODULE.dwg