TL-30 TIME LIMIT MODULE

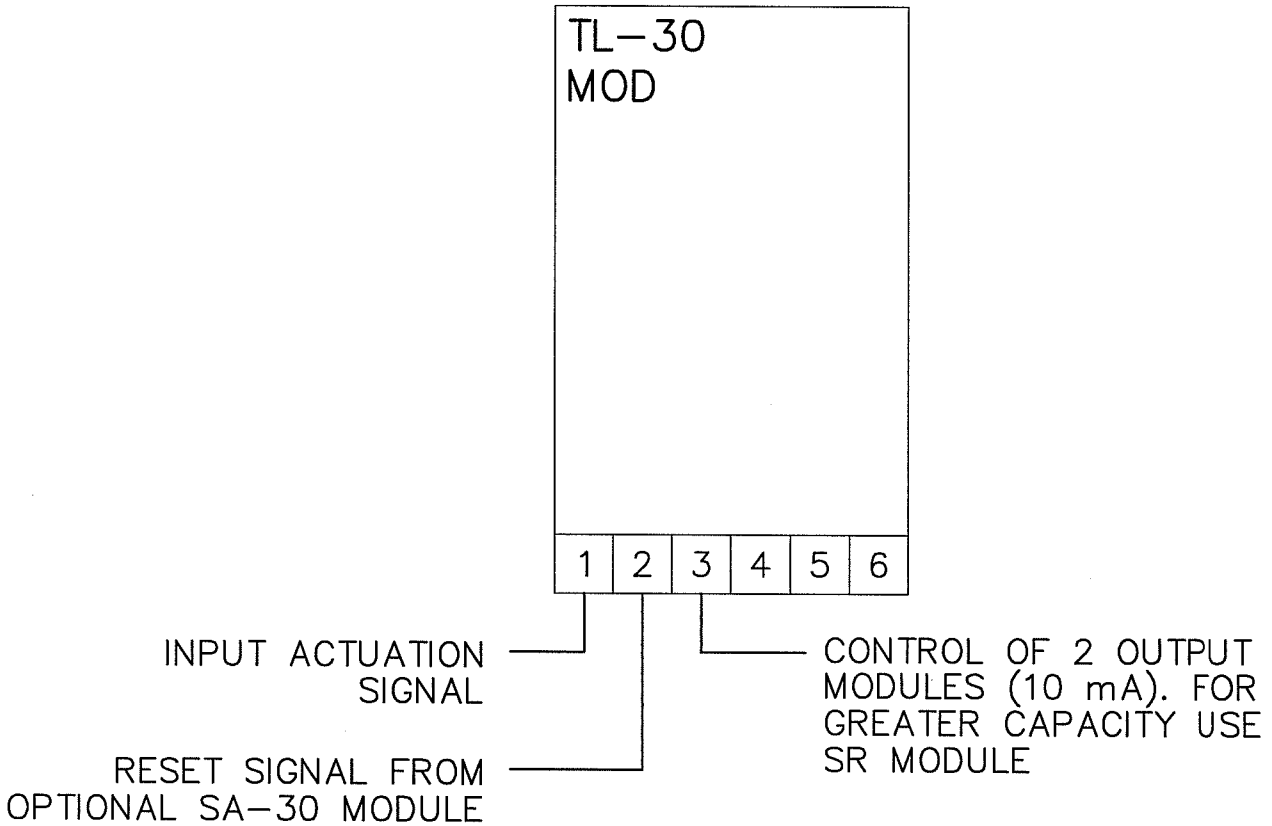

LBNL ELECTRICAL STANDARDS FIRE ALARM SYSTEM TL-30 TIME LIMIT MODULE	DRAWN BY	DATE
	CHECKED BY	
	APPROVED BY	
	CAD FILE PATH	
	SCALE NTS	
UNIVERSITY OF CALIFORNIA LAWRENCE BERKELEY NATIONAL LABORATORY FACILITIES DIVISION	DRAWING NO. FA139	SHEET
	PROJECT NO.	

T:\groups\ELECT\Romy\STD\Fire Alarm\FA139 TL-30 TIME LIMIT MODULE.dwg