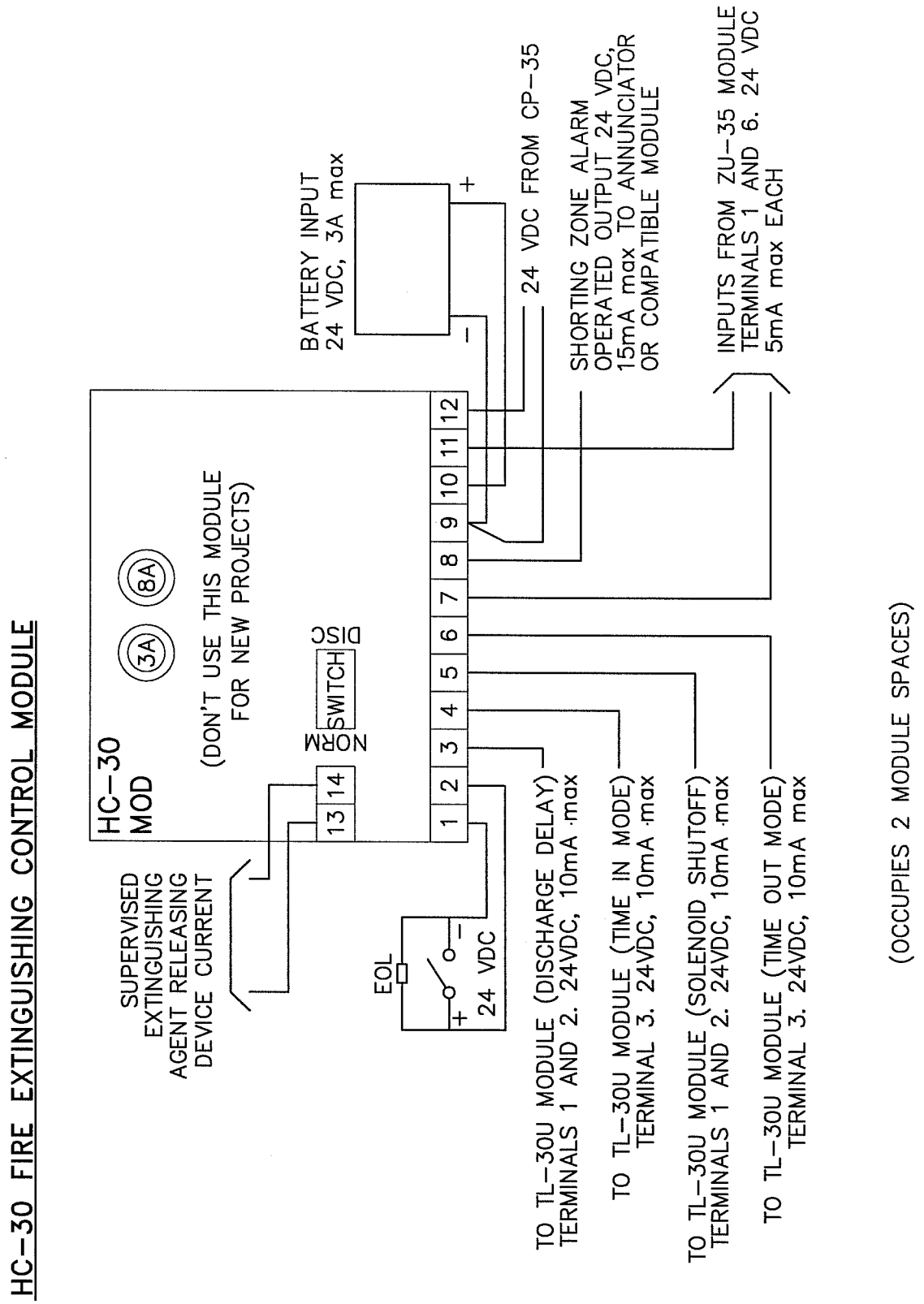

LBNL ELECTRICAL STANDARDS
FIRE ALARM SYSTEM
HC-30 FIRE EXTINGUISHING CONTROL MODULE

UNIVERSITY OF CALIFORNIA LAWRENCE BERKELEY NATIONAL LABORATORY
FACILITIES DIVISION

DRAWN BY	DATE
CHECKED BY	
APPROVED BY	
CAD FILE PATH	
SCALE NTS	
DRAWING NO. FA137	SHEET
PROJECT NO.	

T:\groups\ELECT\Romy\STD\Fire Alarm\FA137 HC-30 FIRE EXTINGUISHING CONTROL MODULE.dwg