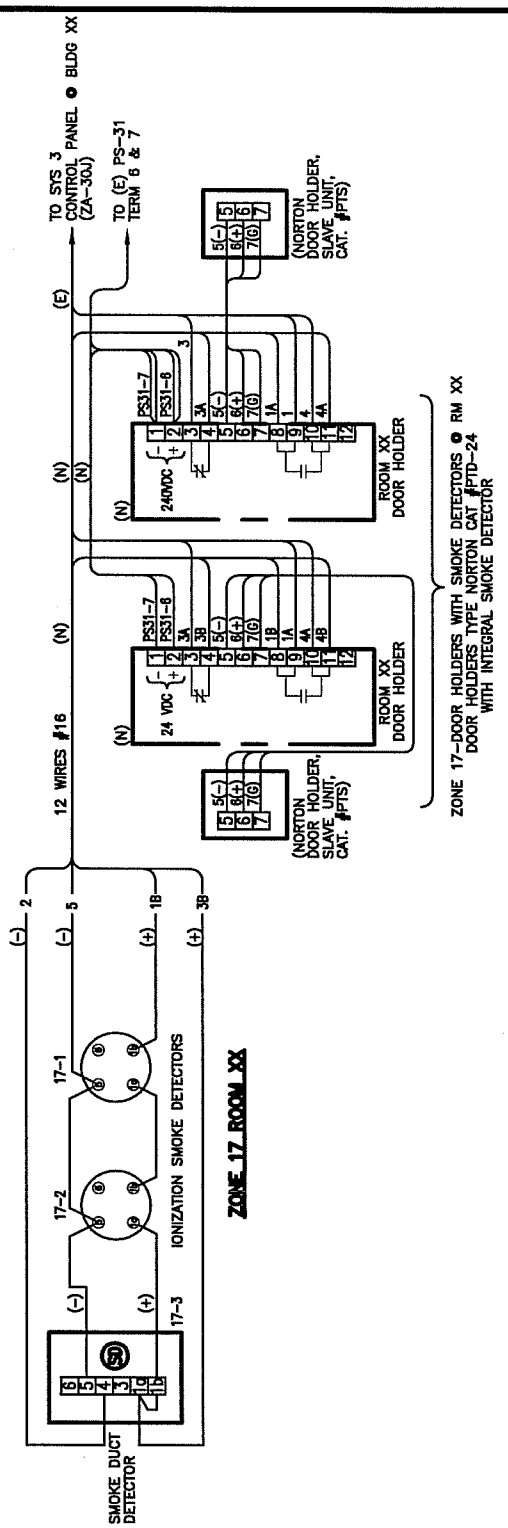

3 DOOR HOLDER WITH SMOKE DETECTORS
(TYPE 'PTD')

LBNL ELECTRICAL STANDARDS
FIRE ALARM SYSTEM
DOOR HOLDER WITH SMOKE DETECTORS

DRAWN BY	DATE
CHECKED BY	
APPROVED BY	
CAD FILE PATH	
SCALE NTS	
DRAWING NO. FA123	SHEET
PROJECT NO.	

UNIVERSITY OF CALIFORNIA LAWRENCE BERKELEY NATIONAL LABORATORY

FACILITIES DIVISION

T:\groups\ELECT\Romy\STD\Fire Alarm\FA123 DOOR HOLDER WITH SMOKE DETECTORS.dwg