"PTD" MASTER SINGLE STATION WIRING DIAGRAM WITH 24VAC/DC OR 120VAC INPUT

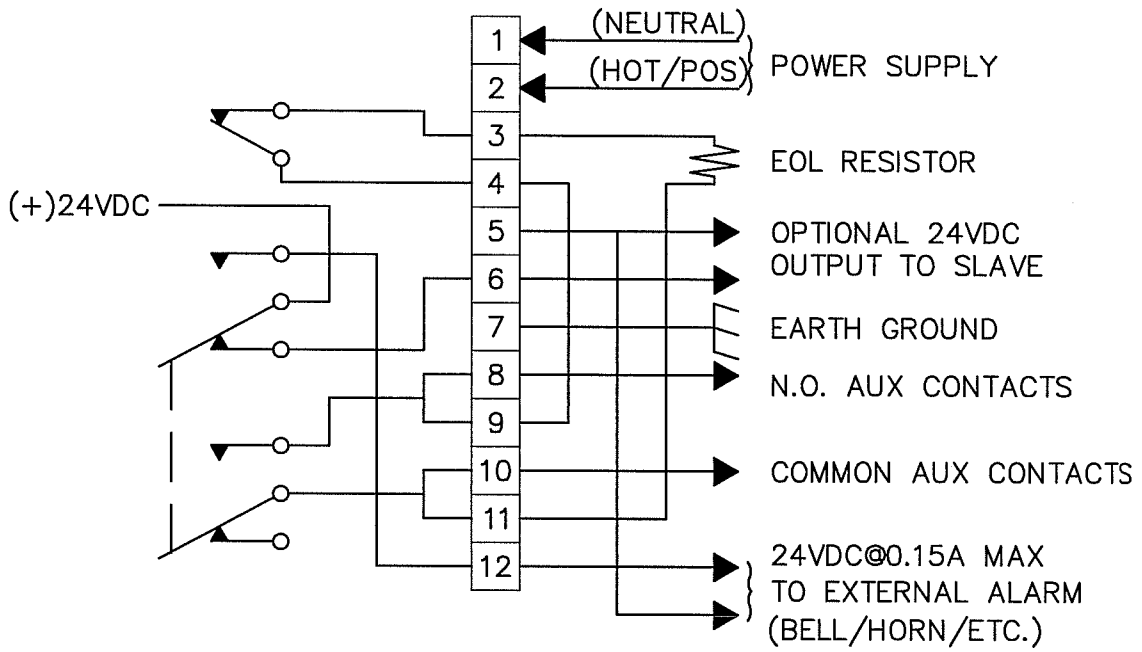

1 "PTD"– INTERNAL WIRING DIAGRAM

LBNL ELECTRICAL STANDARDS FIRE ALARM SYSTEM "PTD"– INTERNAL WIRING DIAGRAM	DRAWN BY	DATE
	CHECKED BY	
	APPROVED BY	
	CAD FILE PATH	
	SCALE NTS	
UNIVERSITY OF CALIFORNIA LAWRENCE BERKELEY NATIONAL LABORATORY FACILITIES DIVISION	DRAWING NO. FA121	SHEET
	PROJECT NO.	

T:\groups\ELECT\Romy\STD\Fire Alarm\FA121 PTD– INTERNAL WIRING DIAGRAM.dwg