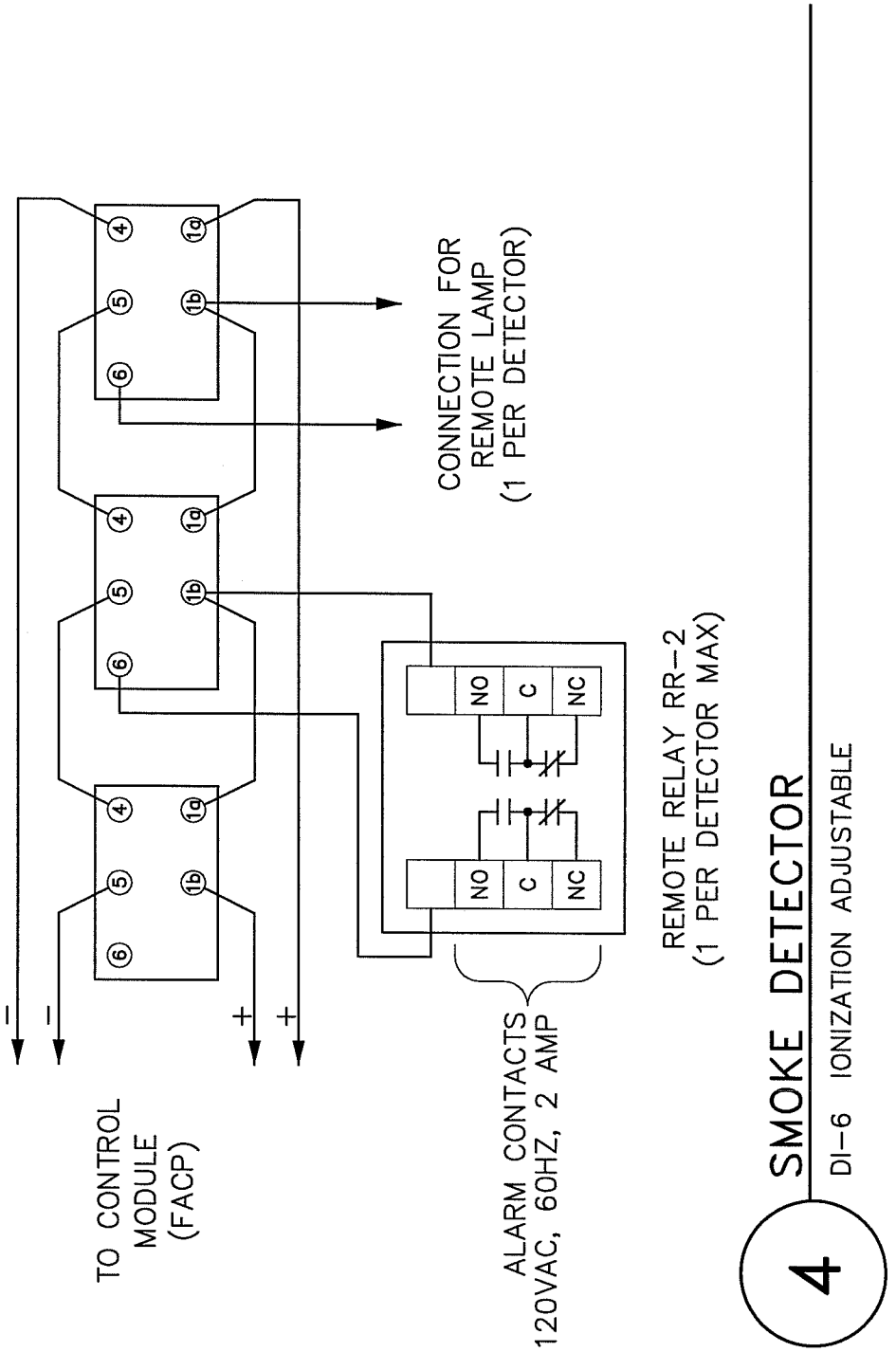

LBNL ELECTRICAL STANDARDS
FIRE ALARM SYSTEM
SMOKE DETECTOR

DRAWN BY	DATE
CHECKED BY	
APPROVED BY	
CAD FILE PATH	
SCALE NTS	
DRAWING NO. FA113	SHEET
PROJECT NO.	

UNIVERSITY OF CALIFORNIA LAWRENCE BERKELEY NATIONAL LABORATORY

FACILITIES DIVISION

T:\groups\ELECT\Romy\STD\Fire Alarm\FA113 SMOKE DETECTOR.dwg