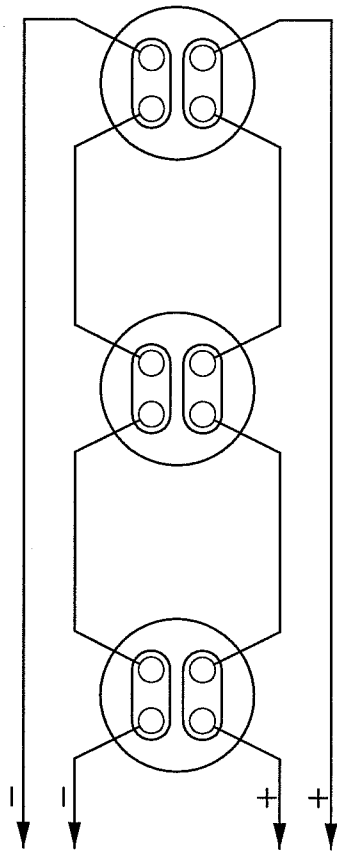

2 HEAT DETECTOR – HORIZONTAL

HORIZONTAL (FENWALL)

LBNL ELECTRICAL STANDARDS FIRE ALARM SYSTEM HEAT DETECTOR – HORIZONTAL	DRAWN BY	DATE
	CHECKED BY	
	APPROVED BY	
	CAD FILE PATH	
	SCALE NTS	
UNIVERSITY OF CALIFORNIA LAWRENCE BERKELEY NATIONAL LABORATORY FACILITIES DIVISION	DRAWING NO. FA111	SHEET
	PROJECT NO.	

T:\groups\ELECT\Romy\STD\Fire Alarm\FA111 HEAT DETECTOR – HORIZONTAL.dwg