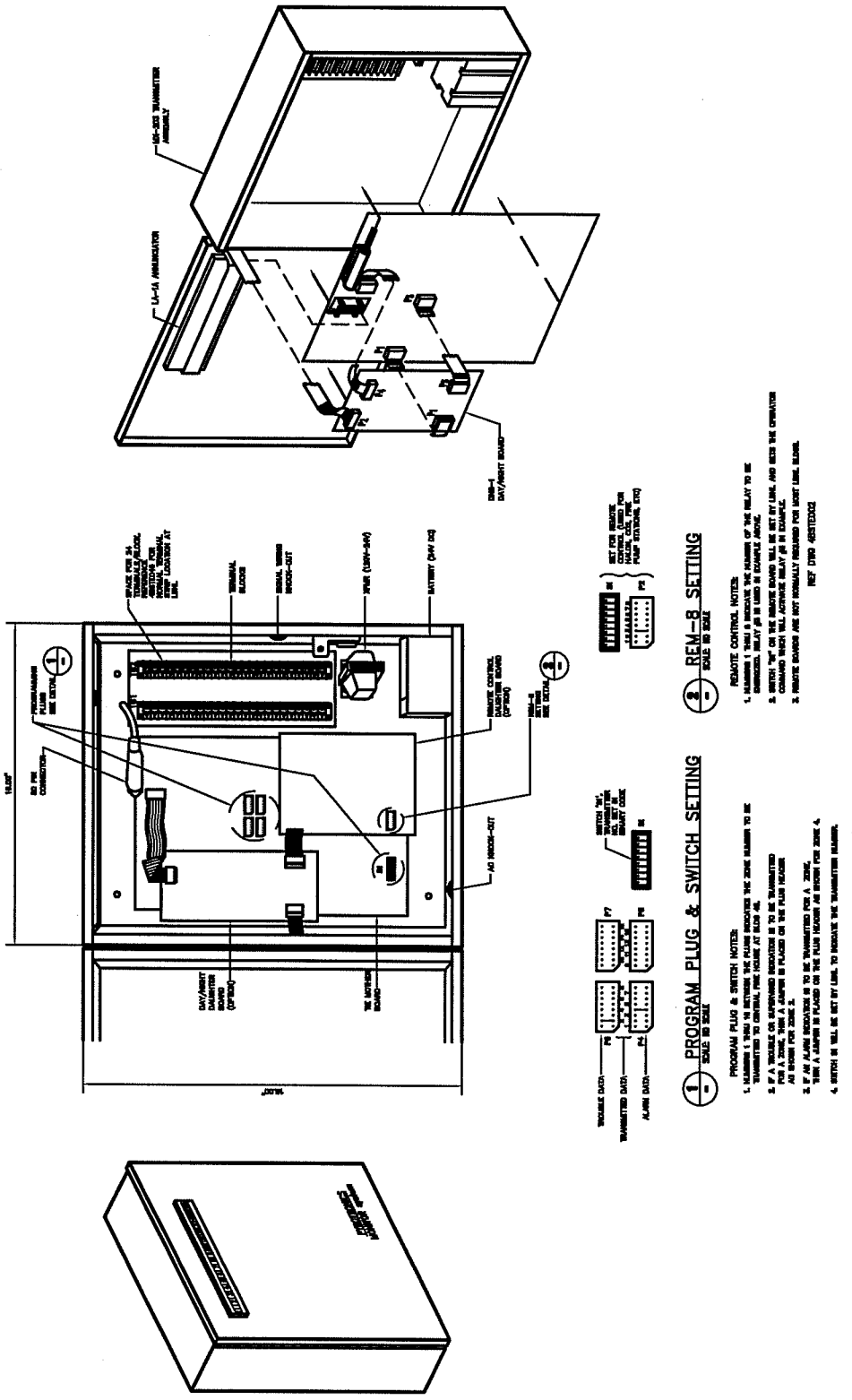

LBNL ELECTRICAL STANDARDS
FIRE ALARM SYSTEM
MX-203 DETAILS & NOTES

DRAWN BY	DATE
CHECKED BY	
APPROVED BY	
CAD FILE PATH	
SCALE NTS	

UNIVERSITY OF CALIFORNIA LAWRENCE BERKELEY NATIONAL LABORATORY

FACILITIES DIVISION

DRAWING NO. FA105

SHEET

PROJECT NO.

T:\groups\ELECT\Romy\STD\Fire Alarm\FA105 MX-203 DETAILS & NOTES.dwg