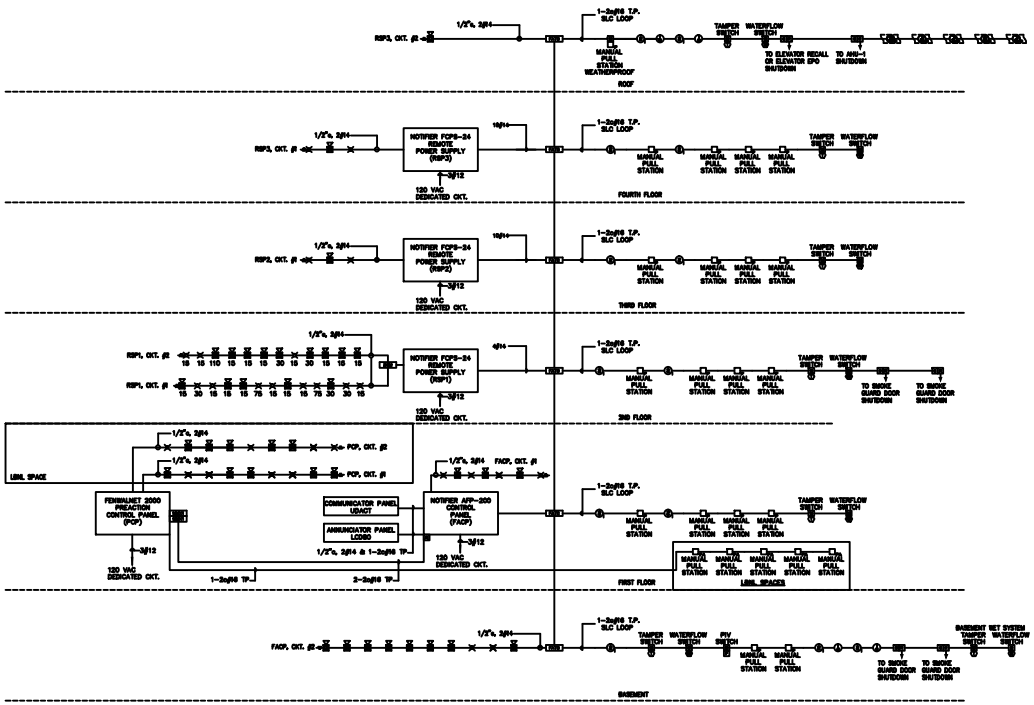

RISER DIAGRAM

SYSTEM DESIGNED IN ACCORDANCE WITH NFPA 70 1996 EDITION, NFPA 72 1999 EDITION, TITLE 24, 1998 CBC PART 2, CFC PART 9, CEC PART 3 & CMC PART 4

WIRE DETAILS:

#12 AWG = TYPE THHN SIGNAL WIRE .205 O.D. 7 STRANDS (COPPER)

#14 AWG = TYPE THHN SIGNAL WIRE .175 O.D. 7 STRANDS (COPPER)

#16 AWG = TYPE TFN SIGNAL WIRE .125 O.D. 7 STRANDS (COPPER)

2x#18SH (SMJ) = SIGNAL CABLE .231 O.D. 7 STRANDS (COPPER)

2x#18p (FPJ) = SIGNAL CABLE .35 O.D. 7 STRANDS (COPPER)

LEGEND:

- FIRE ALARM CONTROL PANEL
- DIGITAL TRANSMITTER
- REMOTE SIGNAL CONTROL PANEL
- DUAL SYNC MODULE
- IONIZATION SMOKE SENSOR.
- THERMAL DETECTOR
- DUCT DETECTOR (BY OTHERS)
- LIQUID CRYSTAL DISPLAY ANNUNCIATOR
- ADDRESSABLE CONTROL MODULE
- ADDRESSABLE MONITOR MODULE
- MONITOR MODULE
- MANUAL PULL STATION
- MANUAL PULL STATION, WIRED TO PCP PANEL
- ALARM STROBE, # = CANDELA RATING
- ALARM HORN/STROBE, # = CANDELA RATING
- ELECTROMAGNETIC DOOR HOLDER, 120 VAC
- TAMPER SWITCH (BY OTHERS)
- WATERFLOW SWITCH (BY OTHERS)
- SPRINKLER RISER (EXISTING)
- FAM-1 RELAY
- JUNCTION BOX (BY OTHERS)
- ADDRESSABLE INPUT MODULE (PCP PANEL)

NOTES:

1. ALL DEVICES ARE EXISTING EXCEPT THOSE LABELED "N" FOR NEW AND "R" FOR RELOCATED.
2. THE AREA SMOKE DETECTORS SHALL NOT BE LOCATED WITHIN 3 FEET OF HVAC SUPPLY AIR DIFFUSERS.

G:\Eng\AutoCAD\Support Files\GREY.ttf

2600 MEA NAR AVENUE
LONG BEACH, CA. 90815
T 562 494 3557
T 562 495 6444

TYPE OF DRAWING

FIRE ALARM - TENANT IMPROVEMENT

CLIENT

DAVID ELECTRIC
1400 MEADOWS DRIVE
SANTA CLARA, CA. 95050-3042

NO.	DATE	DESCRIPTION	BY
1	10/11/2000	FOR SUBMITTAL	CM
2	12-1-00	AS-BUILT	AA

AS BUILT BY

ELECTRICAL		DATE	BY
MECHANICAL		DATE	BY
CHECK-OUT TECHNICIAN		DATE	BY

PROJECT NAME

LAWRENCE BERKLEY NATIONAL LABORATORY.
415 20TH STREET
OAKLAND, CA 94612

SHEET DESCRIPTION RISER DIAGRAM

PROFESSIONAL ENGINEER

EXP. 06/30/2002

PROJECT NUMBER	AL-00001
FILE NAME	AL-00001RLBNL
APPROVED BY	BY
CHECKED BY	HRB
DRAWN BY	CM
SCALE	N/A
DRAWING NUMBER	6380

SHEET NUMBER

FP 2.0

FILE: 00012449
4N943E067

PROJ. NO. FH0113