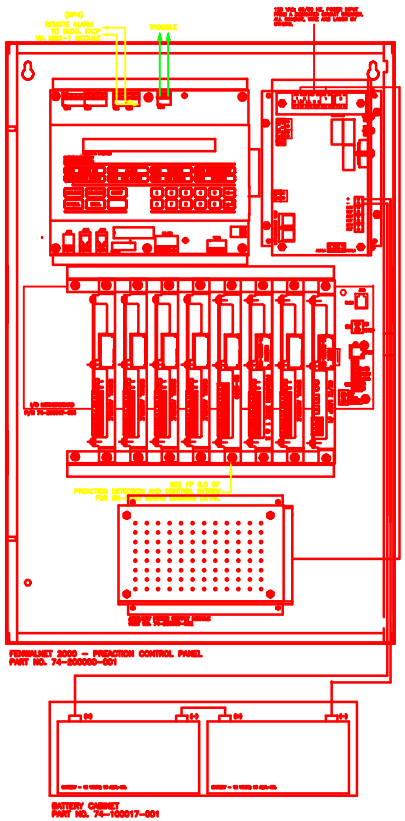

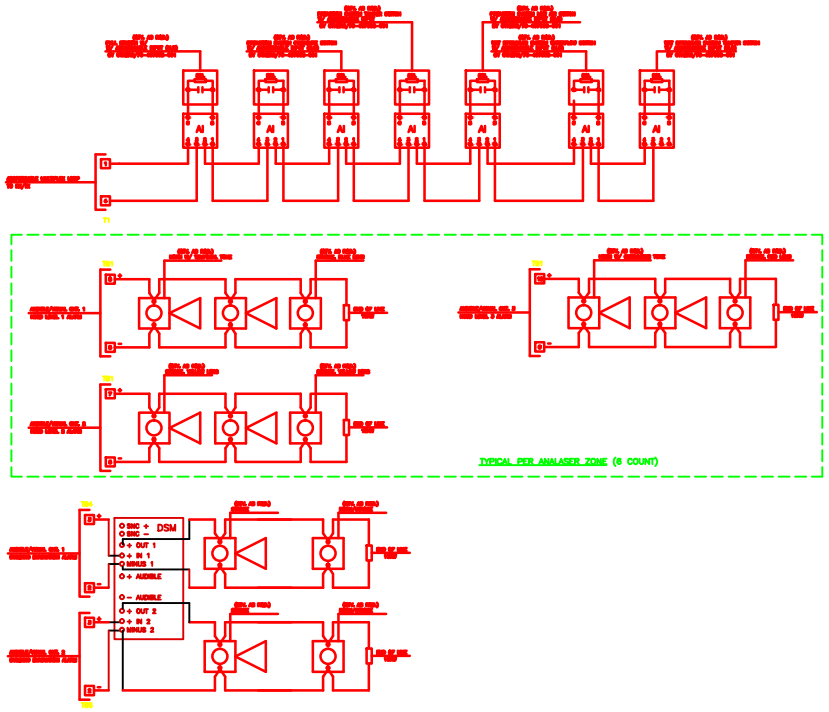

DEVICE	MANUFACTURER	DESCRIPTION	QTY.	STANDBY CURRENT	ALARM CURRENT	DEVICES IN ALARM	STANDBY CURRENT	ALARM CURRENT
74-200000-001	FENWAL	CENTRAL CONTROL MODULE	1	0.070	0.350	1	0.0700	0.3100
30-400005-000	FENWAL	RECEIVER / TRANSMITTER MODULE	1	0.035	0.035	1	0.0350	0.0350
74-100000-001	FENWAL	POWER SUPPLY / MONITOR	2	0.050	0.050	2	0.1200	0.1200
88-100002-001	FENWAL	IM-2000	1	0.070	0.1000	1	0.0350	0.0350
70-200001-001	FENWAL	AGENT RELEASE OUTPUT MODULE	0	0.0850	0.1500	0	0.3850	0.7600
71-200003-001	FENWAL	SIGNAL AUDIBLE MODULE	1	0.0350	0.1300	1	0.0350	0.1300
70-400001-100	FENWAL	PHOTO DETECTOR	0	0.00040	0.00344	0	0	0
70-400003-500	FENWAL	ADDRESSABLE CONTACT OUTPUT	3	0.00340	0.00344	3	0.0012	0.00132
70-407002-001	FENWAL	ADDRESSABLE CONTACT INPUT	18	0.00040	0.00344	18	0.0072	0.00762
7321EB5MUHL1VHCC11C2	BRENNER SOLENOID	PREACTION SOLENOID	2	0	0.4500	2	0	0.9000
R10-1	AIR PRODUCTS	PAM-1 RELAY	3	0	0.0150	3	0	0.0450
SBL03001	SPACE AGE	V33 STROBE	18	0	0.0800	18	0	1.4200
HA240	SPACE AGE	HORN	12	0	0.0130	12	0	0.1560
R20-24199-FR	WHEELOCK	STROBE, 15 CANDELA	2	0	0.0500	2	0	0.1000
R20-24799-FR	WHEELOCK	STROBE, 75 CANDELA	2	0	0.1330	2	0	0.2660
R20-24110G-FR	WHEELOCK	STROBE, 110 CANDELA	3	0	0.1810	3	0	0.4530
AS-24199-FR	WHEELOCK	HORN/STROBE, 15 CANDELA	2	0	0.0870	2	0	0.1740
AS-24799-FR	WHEELOCK	HORN/STROBE, 75 CANDELA	2	0	0.1770	2	0	0.3540
AS-24110G-FR	WHEELOCK	HORN/STROBE, 110 CANDELA	4	0	0.2520	4	0	1.0120
DSM-12/24-R	WHEELOCK	DSM DUAL SYNC MODULE	1	0	0.0380	1	0	0.0380
						TOTAL SUM	0.6184	6.6622

TOTAL SUPERVISORY CURRENT	0.6184
HOURS OF STANDBY	24
AMP HRS REQUIRED	14.8416
TOTAL ALARM CURRENT	6.6622
HOURS OF ALARM	0.167
AMP HRS REQUIRED	1.1109
TOTAL AMP HRS REQUIRED	15.9525
AMP HR. BATT. PROVIDED	18.0

STANDBY BATTERY CALCULATIONS – FENWALNET MODEL 2000
(24 HOURS STANDBY AND 10 MINUTES ALARM)

G:\Eng\AutoCAD\Support Files\GREY.tif

2000 MIRA MAR AVENUE
LONG BEACH, CA. 90815
T 562 494 5007
F 562 495 6684

TYPE OF DRAWING
PREACTION DETECTION AND CONTROL SYSTEM

CLIENT
SIEMCO ELECTRIC
1400 SEGUNDA DRIVE
SANTA CLARA, CALIFORNIA 95050

REV.	DATE	DESCRIPTION	BY
1	4-24-2000	FOR REVIEW	RCA
2	4-25-2000	FOR SUBMITTAL	RCA
3	5-2-2000	REV. PER PLAN CHECK CORRECTIONS	RCA
4	6-23-2000	REV. PER C.O. #1 & C.O. #2	RCA
5	6-23-2000	REV. PER PLAN CHECK CORR. #2	RCA
6	10-10-00	AS BUILT	DR

AS BUILT BY
ELECTRICAL: DATE DATE BY
MECHANICAL: DATE DATE BY
QUALITY ASSURANCE: DATE DATE BY

PROJECT NAME
LAWRENCE BERKELEY
NATIONAL LABORATORY
COMPUTING CENTER
415 20th STREET
OAKLAND, CALIFORNIA 94612

DRAWING TITLE
FENWALNET 2000
PREACTION CONTROL PANEL LAYOUT

PROFESSIONAL STAMP
EXP. 04/30/2001

PROJECT NUMBER: AL-00004
FILE NAME: AL-00004BLDG
DRAWN BY: BY
CHECKED BY: RMB
SHEET BY: RCA
SCALE: N/A
DRAWING NUMBER
6111P

SHEET NUMBER
FP 7.0
FILE: C0012448
4N943E064
PROJ. NO. FH0113