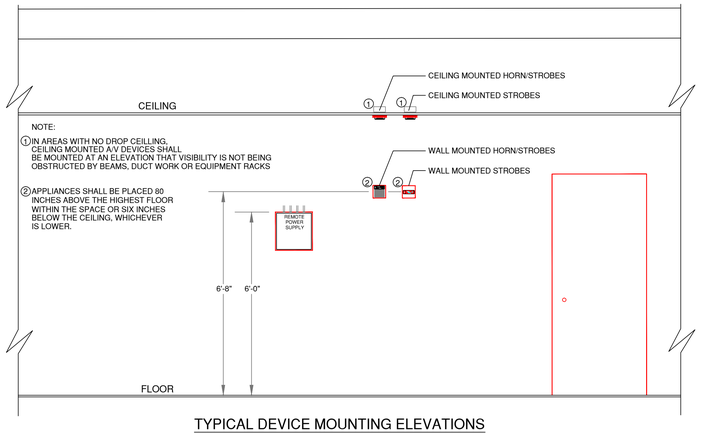

TYPICAL DEVICE MOUNTING ELEVATIONS

N.T.S.

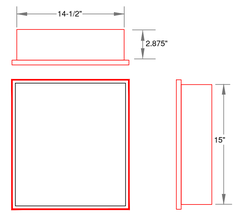

"RPS" REMOTE POWER SUPPLY

N.T.S.

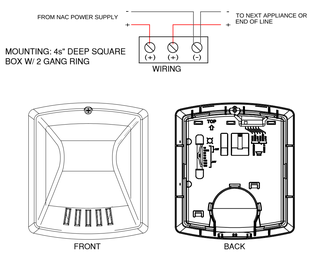

HORN/STROBE & STROBE WALL MOUNT

N.T.S.

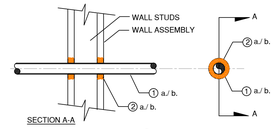

① ONE ELECTRICAL CONDUIT OR PIPE INSTALLED EITHER CONCENTRICALLY OR ECCENTRICALLY WITHIN THE FIRE STOP SYSTEM.

a. GYP. BOARD CONSTRUCTION: A MIN. OF 1/4" ANNUAL THICKNESS SHALL BE APPLIED WITHIN THE FIRE STOP SYSTEM.

b. CONCRETE CONSTRUCTION: THE ANNUAL SPACE BETWEEN THE PENETRATING ITEM AND PERIPHERY OF OPENING SHALL BE MIN. 0" DIA. TO 1-7/8" IN. MAX.

② FIRE STOP CAULK

a. GYP. BOARD CONSTRUCTION: MIN. 1" THICKNESS OF FILL MATERIAL WITHIN THE ANNULUS ON BOTH SIDES OF WALL. ADDITIONAL MATERIAL TO BE APPLIED FROM A MIN. 1/4" CROWN AROUND THE PENETRATING ITEM.

b. CONCRETE CONSTRUCTION: MIN. 5/8" THICKNESS OF FILL MATERIAL WITHIN THE ANNULUS FLUSH WITH BOTH SURFACES OF WALL. BETWEEN THROUGH PENETRATION AND CONCRETE A MIN. 3/8" BEAD OF FILL MATERIAL SHALL BE APPLIED ON BOTH SIDES OF WALL.

NOTE:
ANY THROUGH PENETRATIONS OF RATED ASSEMBLIES SHALL BE PROTECTED TO THE SAME LEVEL AS THE ASSEMBLY ITSELF

WALL PENETRATION

N.T.S.

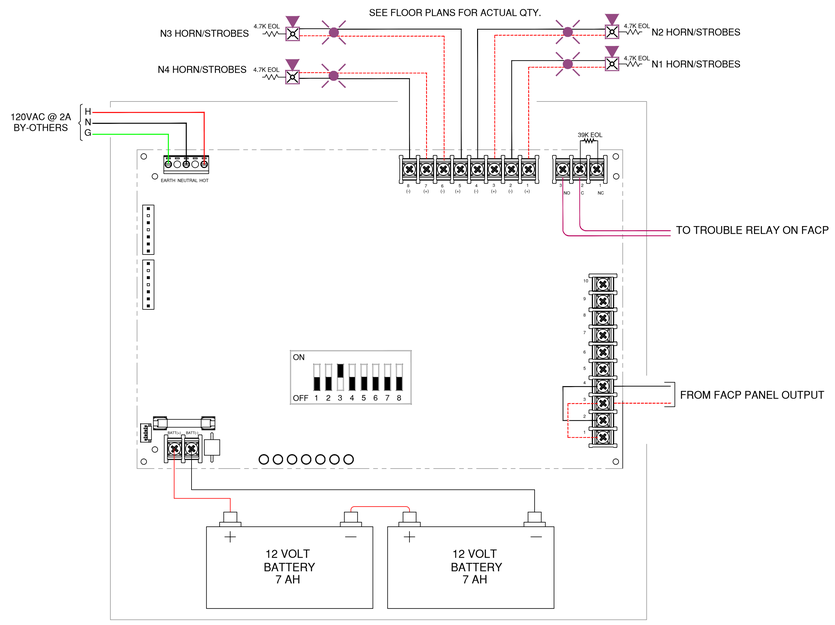

"RPS" REMOTE POWER SUPPLY (1ST FLOOR)

N.T.S.

PROJECT LAWRENCE BERKELEY NATIONAL LAB

POWER SUPPLY

Appliance Description	Amps/Dev	NAC-1 Dev Qty	NAC-1 Amp Draw	NAC-2 Dev Qty	NAC-2 Amp Draw	NAC-3 Dev Qty	NAC-3 Amp Draw	NAC-4 Dev Qty	NAC-4 Amp Draw
AMBER STROBE	0.159		0		0		0		0
STROBE 75CD	0.133		0		0		0		0
RSSVP STROBE	0.094		0		0		0		0
RSSP-24MCW-FR BELL/STROBE	0.156		0		0		0		0
RSSP-24MCW-FR BELL/STROBE 30CD	0.063		0		0		0		0
RSSP-24MCW-FR BELL/STROBE 75CD	0.109		0		0		0		0
RSSP-24MCW-FR BELL/STROBE 110CD	0.14		0		0		0		0
MB-G6-24-R BELL	0.03		0		0		0		0
H/S 95CD	0.205		0		0		0		0
STROBE 75CD	0.205		0		0		0		0
MULTI STROBE 15CD	0.061	3	0.183	3	0.183	1	0.061	4	0.244
MULTI STROBE 30CD	0.085	1	0.085		0	1	0.085		0
MULTI STROBE 75CD	0.135	1	0.135		0		0		0
MULTI STROBE 110CD	0.163		0		0	1	0.163		0
MULTI HORN/STROBE 15CD	0.082		0		0	1	0.082		0
MULTI HORN/STROBE 30CD	0.102		0		0		0	1	0.102
MULTI HORN/STROBE 75CD	0.148	1	0.148	3	0.444	3	0.444	1	0.148
MULTI HORN/STROBE 110CD	0.176	1	0.176	2	0.352	1	0.176	1	0.176
SOM	0.053		0		0		0		0
DSM	0.038		0		0		0		0
Totals		7	0.727	8	0.979	8	1.011	7	0.67

Circuit	I Amps	L Length	Guage	W Ohms / 1000'	R Total Ohms	V Voltage Drop	P % Voltage Drop	Test
NAC-1	0.727	190	14	3.14	1.1932	0.87	3.61	OK
NAC-2	0.979	360	14	3.14	2.2608	2.21	9.22	OK
NAC-3	1.011	375	14	3.14	2.355	2.38	9.92	OK
NAC-4	0.67	210	14	3.14	1.3188	0.88	3.68	OK

PROJECT LAWRENCE BERKELEY NATIONAL LAB

POWER SUPPLY 1

FCPS-24FS6 / 8 Battery Calculation

Entries only to be made in the Yellow cell locations

Regulated Load in Standby

Device Type	Number of Devices		Current (Amps)		Total Current (Amps)
Main PC Board	1	X	0.065	=	0.065
Power Supervision Relays	1	X	0.025	=	0.025
Auxiliary Current Draw from TB4 Terminals 9 & 10		X		=	0
			STANDBY LOAD	=	0.09

Regulated Load in ALARM

Device Type	Number of Devices		Current (Amps)		Total Current (Amps)
Main PC Board without AC	1	X	0.145	=	0.145
Power Supervision Relays	1	X	0.025	=	0.025
Auxiliary Current Draw from TB4 Terminals 9 & 10		X		=	0
NAC / Output # 1	1	X	0.727	=	0.727
NAC / Output # 2	1	X	0.979	=	0.979
NAC / Output # 3	1	X	1.011	=	1.011
NAC / Output # 4	1	X	0.67	=	0.67
			ALARM LOAD	=	3.557

Battery Amp Hour Calculation

Standby Load Current (Amps)			Required Standby Time (Typically 24 or 60 *Hours*)		
0.09	X		24	=	2.16 AH
Alarm Load Current (Amps)			Required Alarm Time (Typically 5 or 10 *Minutes*)		
3.557	X		10	=	0.59 AH
			Sub Total Standby / Alarm Amp Hours		2.75 AH
			Multiply by the Derating Factor	X	1.2 *
			Total Ampere Hours Required	=	**4 AH**

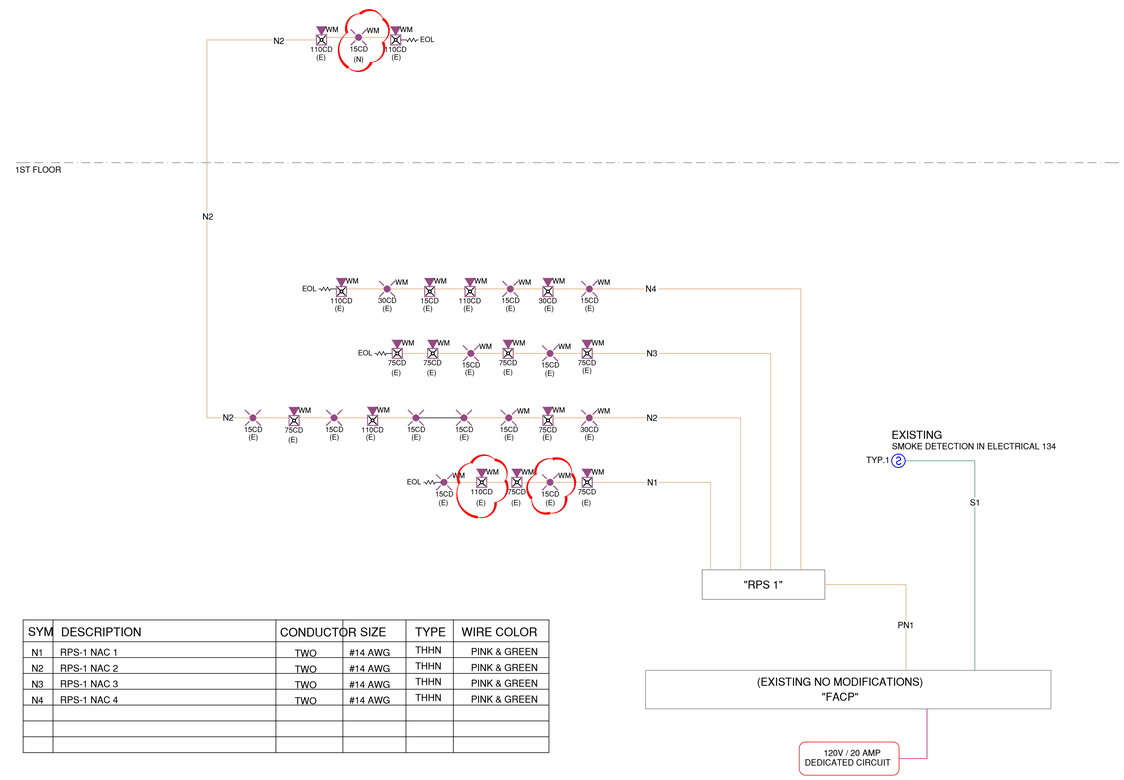

SYM	DESCRIPTION	CONDUCTOR SIZE		TYPE	WIRE COLOR
N1	RPS-1 NAC 1	TWO	#14 AWG	THHN	PINK & GREEN
N2	RPS-1 NAC 2	TWO	#14 AWG	THHN	PINK & GREEN
N3	RPS-1 NAC 3	TWO	#14 AWG	THHN	PINK & GREEN
N4	RPS-1 NAC 4	TWO	#14 AWG	THHN	PINK & GREEN

LBNL DRAWING NO: 4B971E008_

Intelli-tech
Specialists in Fire Systems
A SUBSIDIARY OF FIKE
1031 SERPENTINE LANE
PLEASANTON, CA. 94566
(925) 484-3701

Fire Alarm & Life Safety
Fire Suppression
Personnel Notification

www.gotoitsi.com

COPYRIGHT 2011 ©

LICENSED FIRE PROTECTION CONTRACTOR
Classification C-16 C-10
LICENSE No. 592289
STATE OF CALIFORNIA

PROJECT:

LAWRENCE BERKELEY NATIONAL LAB
6401 HOLLIS STREET, SUITE 175
EMERYVILLE, CA

AS-BUILT

THIS DRAWING CONTAINS CONFIDENTIAL PROPRIETARY INFORMATION OF INTELLIGENT TECHNOLOGIES & SERVICES, INC. ALL RIGHTS ARE EXPRESSLY RESERVED. IT IS SUBMITTED UNDER A TRUST RELATIONSHIP FOR YOUR USE IN APPROVAL CONSTRUCTION OR BIDDING PROCEDURES. THIS DRAWING IS NOT TO BE USED FOR ANY OTHER PURPOSE NOR TO BE REPRODUCED TO ANYONE NOR COPIED IN WHOLE OR IN PART NOR ITS DESIGN FEATURES USED WITHOUT OUR WRITTEN CONSENT. RETURN WHEN NO LONGER REQUIRED OR UPON REQUEST.

NATIONAL INSTITUTE FOR CERTIFICATION IN ENGINEERING TECHNOLOGIES
Sponsored by the National Society of Professional Engineers
The records of this organization show that
FRANK D. KUNOWSKI
is certificated in the technical areas listed on the right side of this card
NICET
Technician Certification Program
Certificationss Valid thru: 06/01-2011 / General Manager
Providing Certification Programs Since 1961
SPECIAL HAZARD SYSTEMS-LEVEL III
(This is a computer generated facsimile of the original document)

REV	DESCRIPTION	DATE
	ISSUED FOR REVIEW	06 / 16 / 11
	IAS-BUILT	07 /5/ 2011

Designer: A. LOPEZ
Sales: B. DIGRAZIA
Project Mgr: C. ROARK

SHEET TITLE:

RISER DIAGRAM AND REMOTE POWER SUPPLY WIRING AND POWER CALCS

PROJECT NO.
C-5173

SHEET:
FA-4