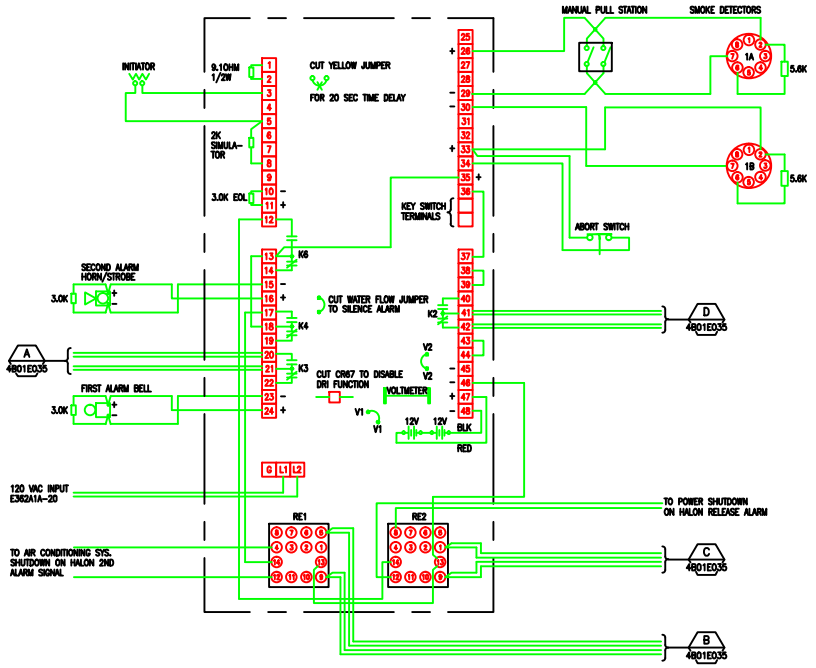

CONTROL PANEL WIRING DIAGRAM

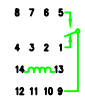

RE1 & RE2

HALON PANEL NOTES:

K2=TROUBLE RELAY OUTPUT
K3=FIRST ALARM RELAY OUTPUT
K4=SECOND ALARM PRE-DISCHARGE RELAY OUTPUT
K6=HALON RELEASE RELAY OUTPUT

A	LM	ROB	MCG	9/17/97	CONVERTED TO AUTOCAD & AS-BUILT

01 ICS NODE FIRE ALARM
HALON CONTROL PANEL
WIRING DIAGRAM

UNIVERSITY OF CALIFORNIA LAWRENCE BERKELEY LABORATORY
FACILITIES DEPARTMENT

DRAWN BY	LM	10/28/97
CHECKED BY	ROB	04/28/97
APPROVED BY	MCG	05/27/97
CAD FILE PATH	00001886	
SCALE	As Noted	
DRAWING NO.	4B01E036A	SHEET E2 1 OF 1
PROJECT NO.	1537184	