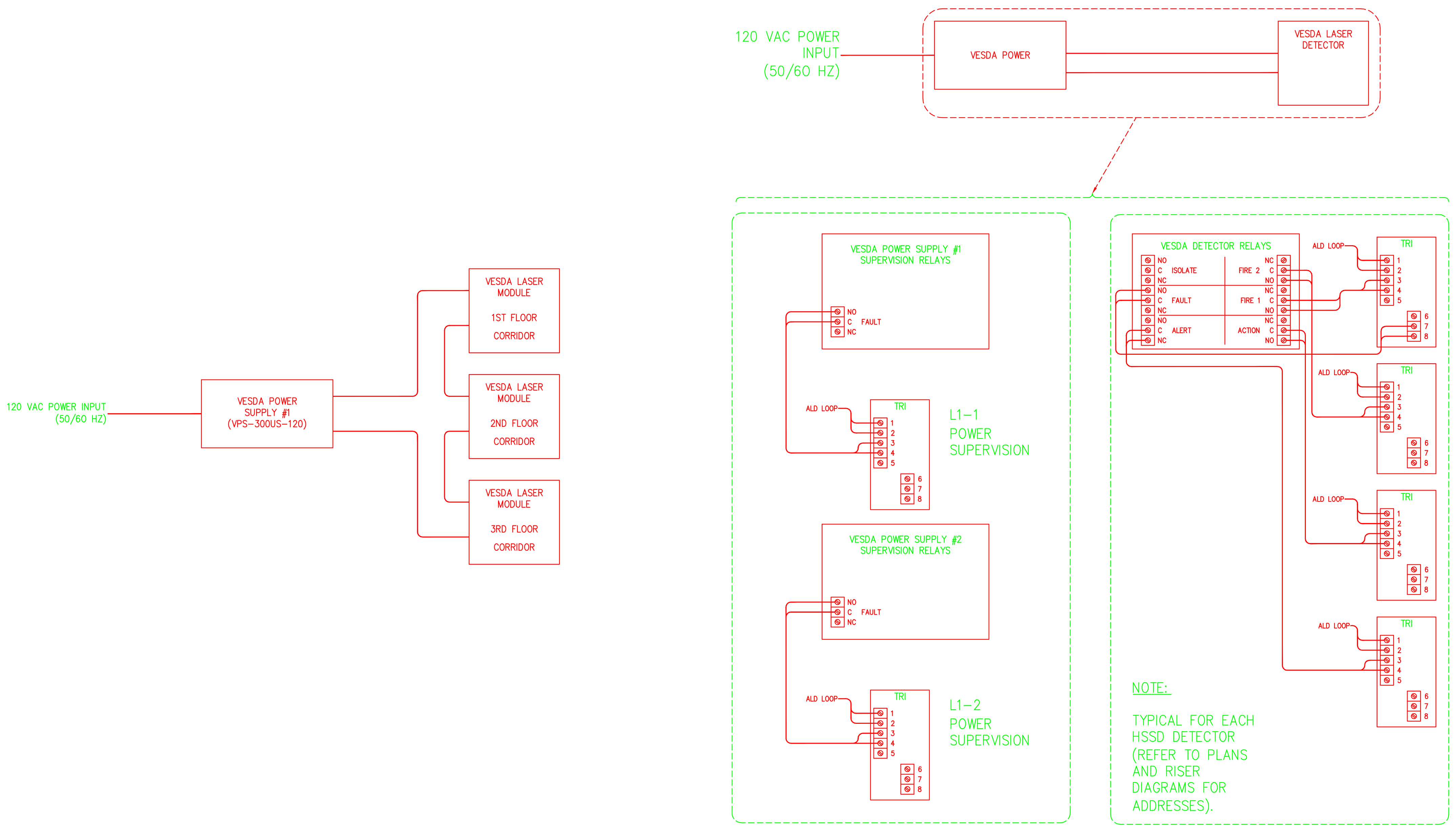

1 HSSD POWER & DETECTOR CONNECTION DETAILS
FA0.1.4 SCALE: NONE

HSSD NOTES

1. THIS DESIGN PROVIDES FOR AN HSSD SYSTEM FOR COVERAGE OF THE IDENTIFIED AREA(S) ON THE BUILDING'S 2ND FLOOR. THESE AREAS SHALL BE PROTECTED BY THE HSSD SYSTEM FOR OPERATION OF THE BUILDING'S OCCUPANT NOTIFICATION APPLIANCES AS DESCRIBED IN THESE DRAWINGS.
2. THE HSSD SYSTEM SHALL UTILIZE AN IEI VESDA DETECTOR AND CPVC PIPE WITH DRILLED SAMPLE ORIFICES (ALL SIZED IN ACCORDANCE WITH THE CALCULATIONS). SAMPLE ORIFICES SHALL BE PROVIDED FOR THE BAY POCKETS FORMED BY THE STRUCTURAL BEAMS AS SHOWN IN THE DRAWINGS.
3. ALL HSSD PIPING SHALL BE SUPPORTED FROM THE BUILDING'S STRUCTURAL BEAMS OR CEILING IN ACCORDANCE WITH THE MANUFACTURER'S RECOMMENDATIONS AND REQUIREMENTS. IN NO CASE SHALL THE SPAN OF UNSUPPORTED SAMPLE PIPE EXCEED 10 FEET.
4. ALL HSSD PIPING SHALL BE MARKED AT REGULAR INTERVALS INDICATING THE PURPOSE OF THE PIPING.
5. THE SUBCONTRACTOR SHALL PERFORM SYSTEM CALCULATIONS DEMONSTRATING THE SYSTEM'S PERFORMANCE.
6. THE SUBCONTRACTOR SHALL PERFORM ALL NECESSARY SYSTEMS TESTING.
7. THE HSSD POWER SUPPLIES SHALL BE LOCATED ADJACENT TO THE BUILDING'S FIRE ALARM CONTROL UNIT. THE POWER SUPPLIES SHALL COMMUNICATE WITH THE CONTROL UNIT FOR SYSTEM STATUS IN ACCORDANCE WITH NFPA 72 AND AS SHOWN IN THESE DRAWINGS.
8. THE HSSD DETECTORS SHALL BE LOCATED AS SHOWN IN THE DRAWINGS. THE DISPLAY SHALL BE 5 FEET AFF. THE DETECTORS SHALL COMMUNICATE WITH THE CONTROL UNIT FOR SYSTEM STATUS IN ACCORDANCE WITH NFPA 72 AND AS SHOWN IN THESE DRAWINGS.
9. ANY LEVEL ALARMS BELOW THE HIGHEST THRESHOLD ALARM SHALL CAUSE FOR THE TRANSMISSION OF A SUPERVISORY SIGNAL TO THE FIRE ALARM CONTROL UNIT AND TO THE LBNL FIRE ALARM RECEIVER. THE HIGHEST THRESHOLD ALARM HSSD ALARM SHALL CAUSE ALL AUDIBLE NOTIFICATION APPLIANCES TO OPERATE AND SHALL ALSO CAUSE AN ALARM SIGNAL TO BE TRANSMITTED TO THE LBNL FIRE ALARM RECEIVER.

HSSD SENSITIVITY SETTINGS

1. IN ACCORDANCE WITH THE MANUFACTURER'S RECOMMENDATIONS, THE VESDA DETECTORS SHALL BE INSTALLED USING THE FACTORY PRESET "DEFAULT" SETTINGS, WHICH ARE PROGRAMMED FOR A COMPUTER ROOM ENVIRONMENT.
2. UPON LBNL OCCUPANCY OF THE BUILDING, THE VESDA DETECTOR SHALL OPERATE FOR A PERIOD OF 14 DAYS FOR THE PURPOSES OF "BURNING IN" THE DETECTOR AND TO DETERMINE THE ACTUAL BACKGROUND OBSCURITY LEVELS OBSERVED. FOLLOWING THAT TIME PERIOD, THE DETECTOR SENSITIVITY SHALL BE ADJUSTED (AS NECESSARY AND APPROPRIATE) USING MULTIPLICATION FACTORS OF 3 TO 10, AS RECOMMENDED BY THE MANUFACTURER.

HSSD FUNCTION CHART

SYSTEM EVENT \ RESPONSE	ANNUNCIATE EVENT AT FACU	FIRE SIGNAL TO LBNL RECEIVER	TROUBLE SIGNAL TO LBNL	SUPERVISORY SIGNAL TO LBNL	OPERATE NOTIFICATION APPLIANCES
HSSD ALERT ALARM	●			●	
HSSD ACTION ALARM	●			●	
HSSD FIRE ALARM 1	●		●		
HSSD FIRE ALARM 2	●	●			●
HSSD POWER SUPPLY FAULT	●		●		
HSSD DETECTOR FAULT	●		●		
SYSTEM FAULT	●		●		

SPECIAL NOTE:

THIS FUNCTION CHART IDENTIFIES THE REQUIRED FUNCTIONS FOR AREAS SERVED BY THE HSSD SYSTEMS, ONLY. REFER TO SHEET FA-0.1.1 FOR THE GENERAL FIRE ALARM SYSTEM FUNCTIONS ASSOCIATED WITH THE REMAINDER OF THE FIRE ALARM SYSTEM.

SLC L1 – 1ST FLOOR

DEVICE ADDRESS	SMOKE DETECTOR WITH STND BASE	DUCT SMOKE DETECTOR WITH DETECTOR HOUSING	HEAT DETECTOR WITH STND BASE	MANUAL PULL STATION WITH TRI-B6M MODULE	WATERFLOW/VALVE SUPV TRI-D/TRI-R	TRI-R OPERATION OR MONITORING	ACTION
-01						●	HSSD POWER SUPV.
-02							NOT USED
-03	●						
-04	●						
-05	●						ELEVATOR RECALL
-06			●				ELEVATOR POWER SHUNT
-07					●		ELEVATOR WFS FOR POWER SHUNT
-08					●		ELEVATOR VALVE SUPV.
-09						●	ELEVATOR FIREFIGHTER INDICATION
-10						●	ELEVATOR FIREFIGHTER OVERRIDE
-11						●	ELEVATOR ALT FLR RECALL
-12						●	ELEVATOR PRIMARY FLR RECALL
-13						●	ELEVATOR POWER SHUNT
-14						●	FSD OPERATION
-15		●					OPERATE FSD USING TRI
-16					●		
-17					●		
-18					●		
-19						●	FSD OPERATION
-20		●					OPERATE FSD USING TRI
-21				●			
-22						●	FSD OPERATION
-23		●					OPERATE FSD USING TRI
-24	●						
-25				●			
-26				●			
-27	●						RECALL ELEVATOR TO ALT. FLR.
-28						●	1ST FLR CORR. HSSD L1 ALRM
-29						●	1ST FLR CORR. HSSD L2 ALRM
-30						●	1ST FLR CORR. HSSD L3 ALRM
-31						●	1ST FLR CORR. HSSD L4 ALRM
-32						●	1ST FLR CORR. HSSD SUPV.
-33						●	FUME HOOD SASH CLOSURE
-34						●	ELEVATOR FIREFIGHTER INDICATION
-35						●	ELEVATOR FIREFIGHTER OVERRIDE
-36						●	ELEVATOR ALT FLR RECALL
-37						●	ELEVATOR PRIMARY FLR RECALL
-38						●	ELEVATOR POWER SHUNT
-39	●						ELEVATOR RECALL
-40			●				ELEVATOR POWER SHUNT
-41					●		ELEVATOR VALVE SUPV.
-42					●		ELEVATOR WFS FOR POWER SHUNT
-43	●						
-44						●	FUME HOOD SASH CLOSURE
-45		●					OPERATE FSD USING TRI
-46						●	FSD OPERATION
-47		●					OPERATE FSD USING TRI
-48						●	FSD OPERATION
-49						●	FUME HOOD SASH CLOSURE
-50				●			
-51			●				ELEVATOR POWER SHUNT
-52							
-53							
-54							
-55							
-56							
-57							
-58							
-59							
-60							
TOTAL	7	5	3	4	7	25	

SLC L2 – 2ND FLOOR

DEVICE ADDRESS	SMOKE DETECTOR WITH STND BASE	DUCT SMOKE DETECTOR WITH DETECTOR HOUSING	HEAT DETECTOR WITH STND BASE	MANUAL PULL STATION WITH TRI-B6M MODULE	WATERFLOW/VALVE SUPV TRI-D/TRI-R	TRI-R OPERATION OR MONITORING	ACTION
-01	●						
-02	●						
-03				●			
-04				●			
-05					●		
-06					●		
-07	●						RECALL ELEVATOR TO ALT. FLR.
-08		●					OPERATE FSD USING TRI
-09						●	FSD OPERATION
-10	●						
-11						●	FUME HOOD SASH CLOSURE
-12						●	FUME HOOD SASH CLOSURE
-13						●	FUME HOOD SASH CLOSURE
-14						●	FUME HOOD SASH CLOSURE
-15						●	FUME HOOD SASH CLOSURE
-16	●						
-17	●						
-18		●					OPERATE FSD USING TRI
-19						●	FSD OPERATION
-20	●						
-21	●						
-22		●					OPERATE FSD USING TRI
-23						●	FSD OPERATION
-24		●					OPERATE FSD USING TRI
-25						●	FSD OPERATION
-26						●	2ND FLR CORR. HSSD L1 ALRM
-27						●	2ND FLR CORR. HSSD L2 ALRM
-28						●	2ND FLR CORR. HSSD L3 ALRM
-29						●	2ND FLR CORR. HSSD L4 ALRM
-30						●	2ND FLR CORR. HSSD SUPV.
-31	●						RECALL ELEVATOR TO PRIMARY FLR.
-32		●					OPERATE FSD USING TRI
-33						●	FSD OPERATION
-34						●	DOOR RELEASE
-35				●			
-36		●					OPERATE FSD USING TRI
-37						●	FSD OPERATION
-38						●	FUME HOOD SASH CLOSURE
-39						●	FUME HOOD SASH CLOSURE
-40	●						
-41				●			
-42		●					OPERATE FSD USING TRI
-43						●	FSD OPERATION
-44						●	FUME HOOD SASH CLOSURE
-45						●	FUME HOOD SASH CLOSURE
-46						●	FUME HOOD SASH CLOSURE
-47						●	OPERATE/OPEN DOOR 214B
-48						●	OPERATE/OPEN DOOR 214B
-49							
-50							
-51							
-52							
-53							
-54							
-55							
-56							
-57							
-58							
-59							
-60							
TOTAL	10	7	0	4	2	24	

SLC L3 – 3RD FLOOR & ROOF

DEVICE ADDRESS	SMOKE DETECTOR WITH STND BASE	DUCT SMOKE DETECTOR WITH DETECTOR HOUSING	HEAT DETECTOR WITH STND BASE	MANUAL PULL STATION WITH TRI-B6M MODULE	WATERFLOW/VALVE SUPV TRI-D/TRI-R	TRI-R OPERATION OR MONITORING	ACTION
-01				●			
-02						●	FSD OPERATION
-03		●					OPERATE FSD USING TRI
-04						●	FSD OPERATION
-05		●					OPERATE FSD USING TRI
-06						●	FSD OPERATION
-07		●					OPERATE FSD USING TRI
-08				●			
-09					●		
-10					●		
-11	●						RECALL ELEVATOR TO PRIMARY FLR.
-12						●	3RD FLR CORR. HSSD L1 ALRM
-13						●	3RD FLR CORR. HSSD L2 ALRM
-14						●	3RD FLR CORR. HSSD L3 ALRM
-15						●	3RD FLR CORR. HSSD L4 ALRM
-16						●	3RD FLR CORR. HSSD SUPV.
-17						●	FUME HOOD SASH CLOSURE
-18						●	FUME HOOD SASH CLOSURE
-19	●						
-20	●						
-21	●						
-22				●			
-23		●					OPERATE FSD USING TRI
-24						●	FSD OPERATION
-25	●						RECALL ELEVATOR TO PRIMARY FLR.
-26						●	DOOR RELEASE
-27				●			
-28						●	FUME HOOD SASH CLOSURE
-29						●	FUME HOOD SASH CLOSURE
-30						●	FUME HOOD SASH CLOSURE
-31						●	FUME HOOD SASH CLOSURE
-32	●						
-33				●			
-34				●			
-35		●					SHUTDOWN HVAC USING TRI
-36						●	HVAC SHUTDOWN
-37		●					SHUTDOWN HVAC USING TRI
-38						●	HVAC SHUTDOWN
-39		●					SHUTDOWN HVAC USING TRI
-40						●	HVAC SHUTDOWN
-41		●					SHUTDOWN HVAC USING TRI
-42		●					SHUTDOWN HVAC USING TRI
-43						●	HVAC SHUTDOWN
-44						●	FUME HOOD SASH CLOSURE
-45							
-46							
-47							
-48							
-49							
-50							
-51							
-52							
-53							
-54							
-55							
-56							
-57							
-58							
-59							
-60							
TOTAL	6	9	0	6	2	20	

SLC L4 – 1ST FLOOR

DEVICE ADDRESS	SMOKE DETECTOR WITH STND BASE	DUCT SMOKE DETECTOR WITH DETECTOR HOUSING	HEAT DETECTOR WITH STND BASE	MANUAL PULL STATION WITH TRI-B6M MODULE	WATERFLOW/VALVE SUPV TRI-D/TRI-R	TRI-R OPERATION OR MONITORING	ACTION
-01			●				
-02			●				
-03			●				
-04			●				
-05			●				
-06			●				
-07			●				
-08			●				
-09			●				
-10						●	COILING DOOR RELEASE
-11						●	COILING DOOR RELEASE
-12		●					OPERATE FSD USING TRI
-13						●	FSD OPERATION
TOTAL	0	1	9	0	0	3	

SLC L5 – 3RD FLOOR

DEVICE ADDRESS	SMOKE DETECTOR WITH STND BASE	DUCT SMOKE DETECTOR WITH DETECTOR HOUSING	HEAT DETECTOR WITH STND BASE	MANUAL PULL STATION WITH TRI-B6M MODULE	WATERFLOW/VALVE SUPV TRI-D/TRI-R	TRI-R OPERATION OR MONITORING	ACTION
-01			●				
-02			●				
-03			●				
-04			●				
-05			●				
-06			●				
-07			●				
-08			●				
-09			●				
-10			●				
-11			●				
-12			●				
-13			●				
-14			●				
-15			●				
-16			●				
-17			●				
-18			●				
-19			●				
-20			●				
-21			●				
-20				●			
-21				●			
TOTAL	0	0	21	2	0	0	

2 SLC LOOP ADDRESS LISTS
FA0.1.4 SCALE: NONE

NOTIFICATION APPLIANCE CIRCUIT POWER REQUIREMENTS & VOLTAGE DROP CALCULATIONS

DESCRIPTION	CURRENT PER APPLIANCE	# OF APPLIANCES										
		CIRCUIT AV1	CIRCUIT AV2	CIRCUIT AV3	CIRCUIT AV4	CIRCUIT AV5	CIRCUIT AV6	CIRCUIT AV7	CIRCUIT AV8	CIRCUIT AV9	CIRCUIT AV10	CIRCUIT AV11
WHEELOCK SERIES Z WALL STROBE 15 cd	0.060	0	0	0	0	2	0	1	2	1	1	1
WHEELOCK SERIES Z WALL HORN/STROBE 15 cd	0.074	3	5	4	3	4	2	2	5	4	3	3
WHEELOCK SERIES Z WALL STROBE 30 cd	0.092	2	3	0	1	0	1	2	2	0	3	0
WHEELOCK SERIES Z WALL HORN/STROBE 30 cd	0.107	4	0	2	0	1	2	2	1	1	2	0
WHEELOCK SERIES Z WALL STROBE 75 cd	0.165	0	0	0	1	0	2	1	0	0	0	0
WHEELOCK SERIES Z WALL HORN/STROBE 75 cd	0.184	0	1	1	3	0	2	1	1	4	1	2
WHEELOCK SERIES Z WALL STROBE 110 cd	0.220	0	0	0	0	0	0	0	0	0	0	0
WHEELOCK SERIES Z WALL HORN/STROBE 110 cd	0.244	0	0	1	0	2	0	0	0	0	0	1
COOPER WHEELOCK HORN – AH24WP-R	0.043	0	0	0	0	0	0	0	0	0	0	2
TOTAL CIRCUIT CURRENT		0.834	0.830	0.938	1.031	1.011	1.152	0.955	0.965	1.119	0.956	0.956

{(I) (D) (21.6)}/CM
WHERE: I = CIRCUIT POWER LOAD; 21.6 = CONSTANT
D = CONDUCTOR ONE WAY DISTANCE; CM = CROSS SECTION AREA OF WIRE (4110 FOR AWG#14)

NAC AV1: {(0.834 AMP)(300 FT)(21.64)}/4110 VOLTAGE DROP: 1.317 VOLTS AVAILABLE VOLTAGE: 22.683 VOLTS

NAC AV2: {(0.830 AMP)(375 FT)(21.64)}/4110 VOLTAGE DROP: 1.639 VOLTS AVAILABLE VOLTAGE: 22.361 VOLTS

NAC AV3: {(0.938 AMP)(450 FT)(21.64)}/4110 VOLTAGE DROP: 2.222 VOLTS AVAILABLE VOLTAGE: 21.778 VOLTS

NAC AV4: {(1.031 AMP)(350 FT)(21.64)}/4110 VOLTAGE DROP: 1.9001 VOLTS AVAILABLE VOLTAGE: 22.100 VOLTS

NAC AV5: {(1.011 AMP)(475 FT)(21.64)}/4110 VOLTAGE DROP: 2.528 VOLTS AVAILABLE VOLTAGE: 21.472 VOLTS

NAC AV6: {(1.152 AMP)(500 FT)(21.64)}/4110 VOLTAGE DROP: 3.033 VOLTS AVAILABLE VOLTAGE: 20.967 VOLTS

NAC AV7: {(0.955 AMP)(575 FT)(21.64)}/4110 VOLTAGE DROP: 2.891 VOLTS AVAILABLE VOLTAGE: 21.109 VOLTS

NAC AV8: {(0.965 AMP)(400 FT)(21.64)}/4110 VOLTAGE DROP: 2.032 VOLTS AVAILABLE VOLTAGE: 21.968 VOLTS

NAC AV9: {(1.119 AMP)(525 FT)(21.64)}/4110 VOLTAGE DROP: 3.093 VOLTS AVAILABLE VOLTAGE: 20.907 VOLTS

NAC AV10: {(0.956 AMP)(600 FT)(21.64)}/4110 VOLTAGE DROP: 3.020 VOLTS AVAILABLE VOLTAGE: 20.980 VOLTS

NAC AV11: {(0.956 AMP)(1,000 FT)(21.64)}/4110 VOLTAGE DROP: 5.033 VOLTS AVAILABLE VOLTAGE: 18.97 VOLTS

THE CIRCUITS' AVAILABLE VOLTAGE IS ABOVE THE MINIMUM LISTED VOLTAGE FOR THE APPLIANCES.

NOTES:

1. COPER NOTIFICATION, WHEELOCK SERIES Z STROBES AND HORN/STROBES WERE USED IN THE DESIGN. THE USE OF OTHER APPLIANCES SHALL REQUIRE NEW VOLTAGE DROP CALCULATIONS TO DEMONSTRATE THE ADEQUACY OF DESIGN.
2. THE CIRCUIT VOLTAGE DROP CALCULATIONS HAVE BEEN DETERMINED TO PROVIDE SPARE CAPACITY FOR FUTURE MODIFICATIONS IN ACCORDANCE WITH LBNL REQUIREMENTS.

"AS BUILT" NOTE:
REFER TO SIEMENS INDUSTRY (INSTALLATION CONTRACTOR) "AS BUILT" PLANS AND DETAILS FOR FINAL LAYOUT OF THE FIRE ALARM SYSTEMS.

BERKELEY LAB
UNIVERSITY OF CALIFORNIA
LAWRENCE BERKELEY NATIONAL LABORATORY
FACILITIES DIVISION
OWNER

RMW architecture & interiors
vision function space culture ideas experience think listen build speak learn
160 Pine Street
San Francisco, CA 94111
Tel 415.781.9800
Fax 415.788.5216
www.rmw.com
CONSULTING FIRM

HYT Corporation
Fire Protection Engineers and Consultants
3498 Clayton Road - Suite 101 Concord, California 94519
Phone: (925) 681-2731 FAX: (925) 681-2733
CONSULTING A/E FIRM

REGISTERED PROFESSIONAL ENGINEER BRET B. TREADER No. 1165 Exp. 9/30/10 FIRE PROTECTION STATE OF CALIFORNIA
PROFESSIONAL SEAL (IF REVISION, APPLIES ONLY TO REVISED WORK)

"AS BUILT"
05/2013
ISSUE (PROGRESS, ESTIMATE, BID, CONSTRUCTION, CONFORMED, REVISION, AS-BUILT)

REVISION NUMBER	DRAWN BY	CHECKED BY	APPRO BY	DATE	REMARKS

LBNL "AS BUILT – SEISMIC PHASE 2
BUILDING 74
HSSD DETAILS, ADDRESSES & VOLTAGE DROP, FIRE ALARM

UNIVERSITY OF CALIFORNIA
LAWRENCE BERKELEY NATIONAL LABORATORY
FACILITIES DIVISION

DRAWN BY	HYT	DATE	
CHECKED BY	HYT		05/2013
APPROVED BY			
CAD FILE PATH			
SCALE	As Noted		
DRAWING NO.	6N74E279_	SHEET	FA0.1.4
PROJECT NO.	29090.00		