LABORATORY BUILDING SIGNALING LINE CIRCUIT RISER DIAGRAM – DETAIL 1

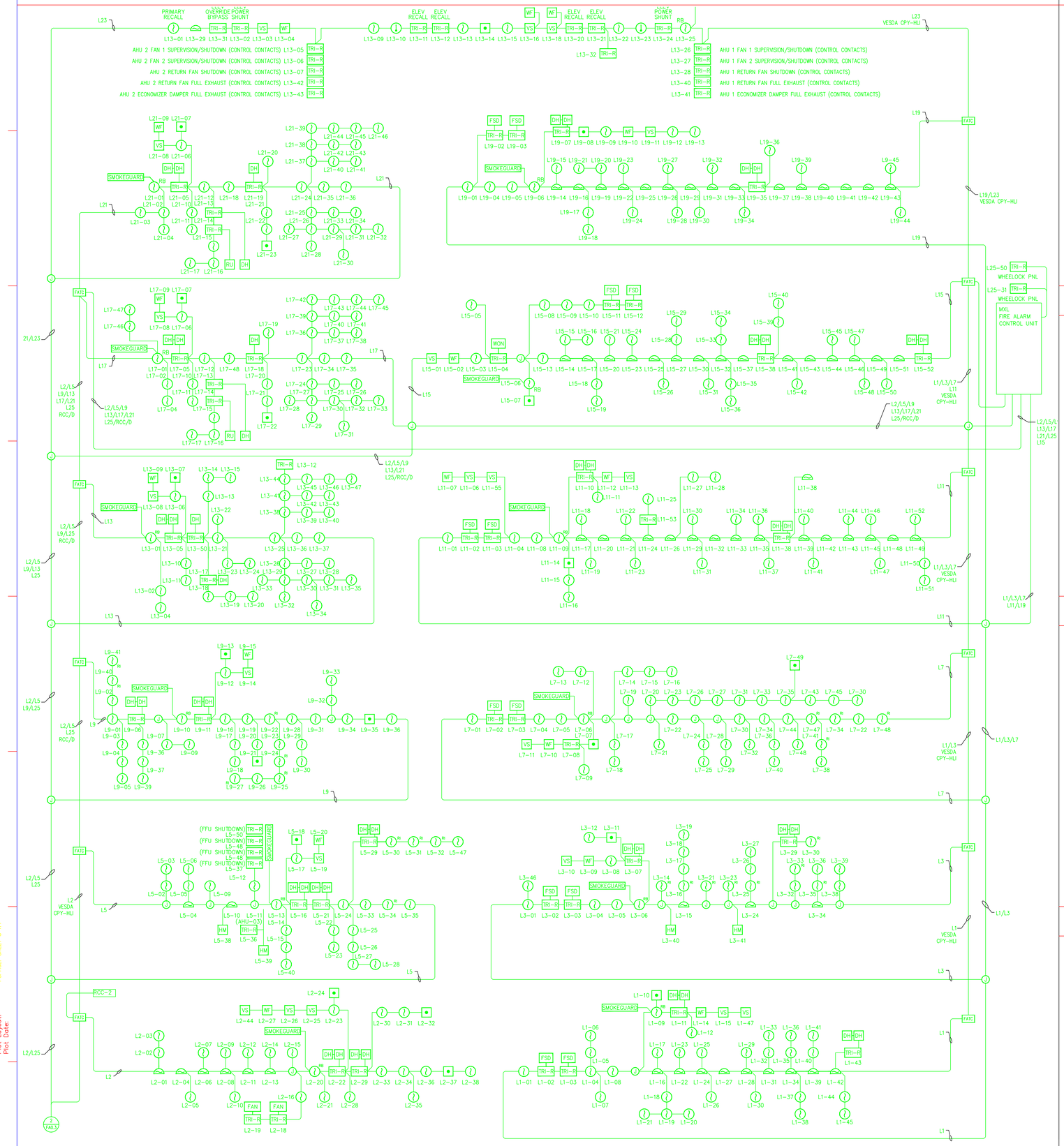

UTILITY BUILDING SIGNALING LINE CIRCUIT RISER DIAGRAM – DETAIL 2

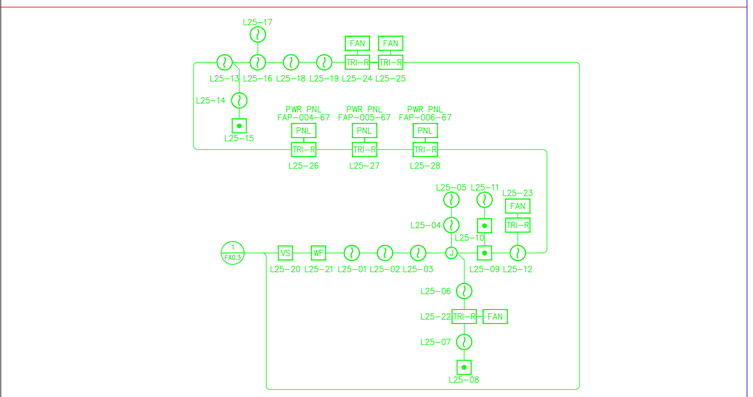

INTELLIGENT INTERFACE MODULE (TRI-R) WIRING DETAIL – DETAIL 3

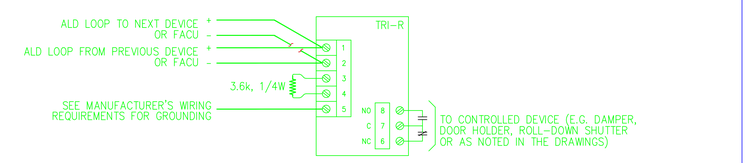

INTELLIGENT INTERFACE MODULE (TRI-D) WIRING DETAIL – DETAIL 4

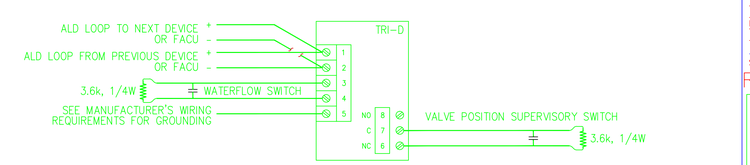

FIRE ALARM SYSTEM LEGEND

- L1-01 — SMOKE DETECTOR, ADDRESS AS NOTED
- L1-02 — DS — DUCT SMOKE DETECTOR, ADDRESS AS NOTED
- L1-03 — FIRE CALL BOX, ADDRESS AS NOTED
- L1-04 RI — SMOKE DETECTOR WITH REMOTE INDICATOR, ADDRESS AS NOTED
- L1-04 RB — SMOKE DETECTOR WITH RELAY BASE, ADDRESS AS NOTED
- L1-04 — SIDEWALL MOUNTED SMOKE DETECTOR, ADDRESS AS NOTED
- FACU — FIRE ALARM SYSTEM CONTROL UNIT (MXL)
- V-01 15 cd — S — STROBE, APPLIANCE NUMBER & MINIMUM CANDELA RATING AS NOTED
- A-01 110 cd — AV — HORN/STROBE, APPLIANCE NUMBER AND MINIMUM CANDELA AS NOTED
- A-01 — H — HORN, APPLIANCE NUMBER AND MINIMUM CANDELA AS NOTED
- RCC — REMOTE COMMAND CENTER (RCC-2)
- L1-05 — VS — FIRE SPRINKLER VALVE SUPERVISORY SWITCH, ADDRESS AS NOTED
- L1-06 — WF — FIRE SPRINKLER WATERFLOW SWITCH, ADDRESS AS NOTED
- DH — DOOR HOLDER (INSTALLED UNDER SEPARATE SECTION)
- TRI-R — INTELLIGENT INTERFACE MODULE
- HM — HAZARDOUS MATERIAL SPILL ALARM PULL STATION
- HSSD — HIGH SENSITIVITY SMOKE DETECTOR (HSSD)
- HSSD SAMPLE PIPING AND SAMPLE ORIFICE
- RU — ROLL-UP DOOR RELEASE (INSTALLED UNDER SEPARATE SECTION)
- FSD — FIRE SMOKE DAMPER (INSTALLED UNDER SEPARATE SECTION)
- EOL — END-OF-LINE DEVICE
- J — JUNCTION BOX
- FIRE ALARM CONDUIT (3/4-INCH UNLESS OTHERWISE NOTED)
- FIRE ALARM CIRCUIT IDENTIFICATION
  - L1/L2 – 1-PAIR; SLC/IDC LOOP (L1 THROUGH L14)
  - A1 – 1 PAIR #14; AUDIBLE NAC CIRCUIT (A1 THROUGH A8)
  - V1/V2/V3 – 1 PAIR #14; VISUAL NAC CIRCUIT (V1 THROUGH V20)
  - RCC (TYPICAL UNO) – 1-RS232 FOR REMOTE ANNUNCIATION; TYPICAL UNLESS NOTED OTHERWISE

Lawrence Berkeley National Laboratory

Molecular Foundry Building 67

Issued for	Rev	Date
RECORD DRAWINGS		18 JAN 2007

Seals and Signatures

RECORD DRAWINGS

SPECIAL NOTE:
THE INFORMATION SHOWN IN THIS DRAWING WAS DEVELOPED USING THE RECORD DRAWINGS PROVIDED BY SIEMENS BUILDING TECHNOLOGIES, INC. FOLLOWING THE COMPLETION OF THIS PROJECT (IDENTIFIED AS JOB NUMBER 107739, SHEETS 1 THROUGH 24). SPECIFICALLY, SEE SHEET 16 OF 24 FOR INFORMATION.

LBNL Project Title: MOLECULAR FOUNDRY
LBNL Building Number: 67

Key Plan

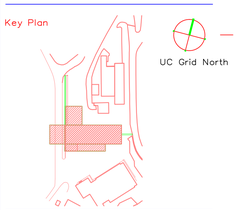

Drawing Title: FIRE ALARM SYSTEM RISER DIAGRAMS AND DETAILS

Scale: MF1212

SG Project Number: FA0.3

LBNL Project Number: 3 OF 20

Drawing Number: 5N67E023

LBNL Drawing Number: IFB 841

Plot Sheet Filename: /XRS\JOBNUMBER\FILENAME
XREF Filename List: /XRS\JOBNUMBER\FILENAME
Xref Page Setup: PAGE SIZE @ 1:1
Plot Layout: PSPACE SHEET
Plot Date:

LBNL Drawing Status:
LBNL Issue Status:
LBNL Revision:
LBNL Date: