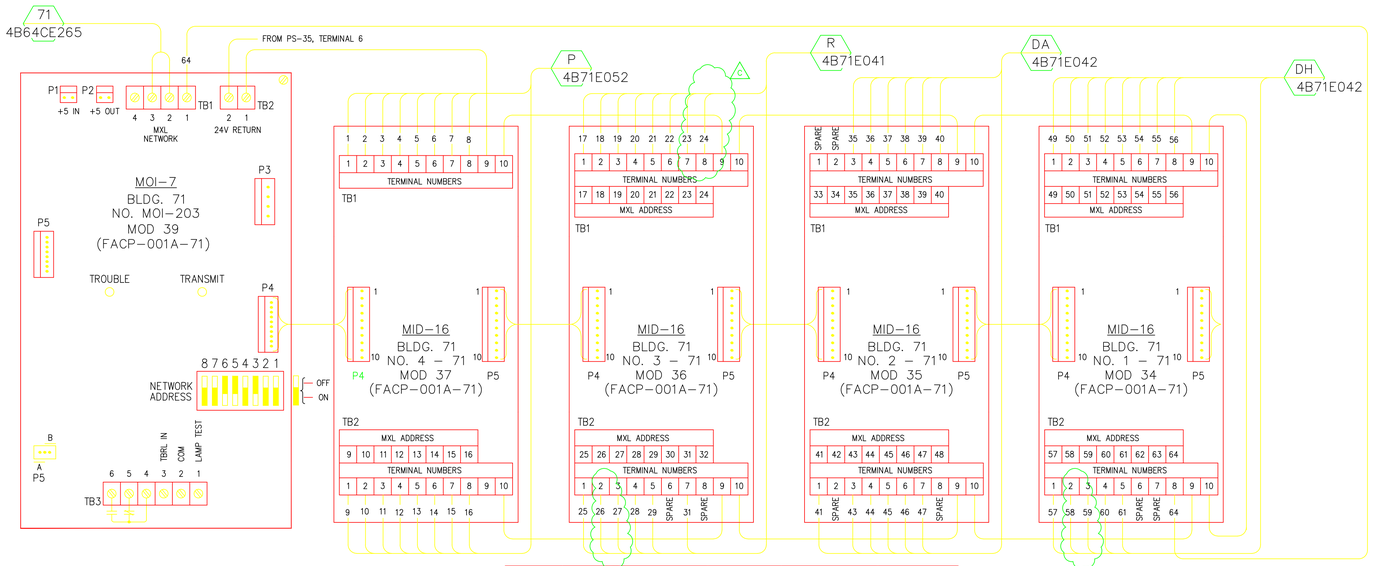

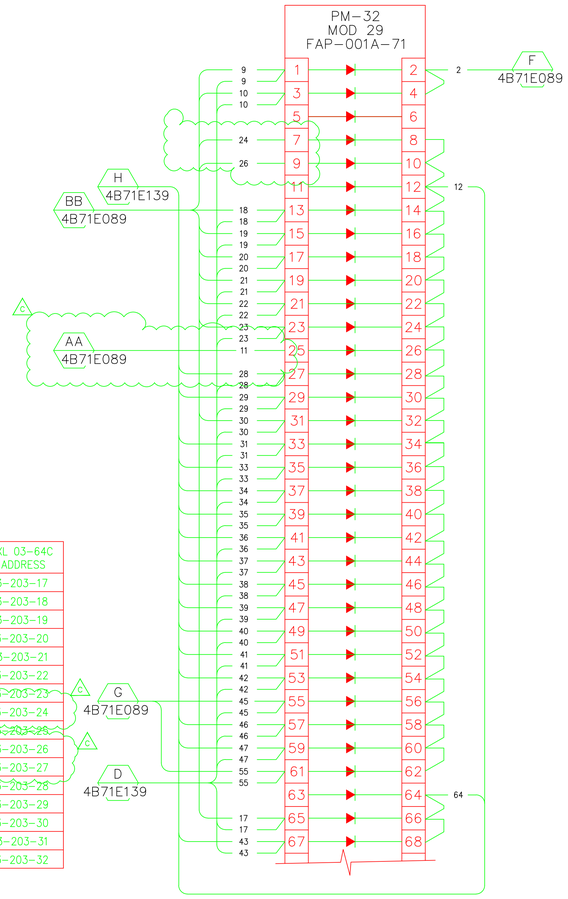

OLD ADDRESS	DESCRIPTION	MID-16 TERMINATION	MODULE TYPE & NO. 1	MXL 03-64C ADDRESS
2C81	SUPERVISION CT-1 : RISER VALVE	TB1, No. 1	MID 16, 1-71	3-203-49
2C82	SUPERVISION CT-2 & 3 : RISER VALVE	TB1, No. 2	MID 16, 1-71	3-203-50
2C83	SUPERVISION NORTH RISER VALVE RISER &/OR ZONE 7	TB1, No. 3	MID 16, 1-71	3-203-51
2C84	SUPERVISION NORTH RISER	TB1, No. 4	MID 16, 1-71	3-203-52
2C85	SUPERVISION SUPPLY VALVES FOR SOUTH RISER & BLDG. 71B	TB1, No. 5	MID 16, 1-71	3-203-53
2C86	SUPERVISION SOUTH RISER	TB1, No. 6	MID 16, 1-71	3-203-54
2C87	DUCT DETECTOR AHU-27/32	TB1, No. 7	MID 16, 1-71	3-203-55
2C88	SUPERVISION, BLDG. 71B ISOLATION VALVES	TB1, No. 8	MID 16, 1-71	3-203-56
2C89	SUPERVISION RISER VALVE	TB2, No. 1	MID 16, 1-71	3-203-57
~~2C90~~	~~SUPERVISION NORTH RISER~~	~~TB2, No. 2~~	~~MID 16, 1-71~~	~~3-203-58~~
	BELLA HSSD POWER SUPV	TB2, No. 3	MID 16, 1-71	3-203-59
	BELLA HSSD DETECTOR SUPV	TB2, No. 4	MID 16, 1-71	3-203-60
~~2C93~~	~~SYSTEM 3 TROUBLE~~	~~TB2, No. 5~~	~~MID 16, 1-71~~	~~3-203-61~~
2C94	NOT USED	TB2, No. 6	MID 16, 1-71	3-203-62
2C95	NOT USED	TB2, No. 7	MID 16, 1-71	3-203-63
2C96	MOI RIBBON UNPLUGGED	TB2, No. 8	MID 16, 1-71	3-203-64

OLD ADDRESS	DESCRIPTION	MID-16 TERMINATION	MODULE TYPE & NO. 4	MXL 03-64C ADDRESS
2E17	ISOLATION VALVE	TB1, No. 1	MID 16, 4-71	3-203-1
2E18	ISOLATION VALVE	TB1, No. 2	MID 16, 4-71	3-203-2
2E19	ISOLATION VALVE	TB1, No. 3	MID 16, 4-71	3-203-3
2E20	ISOLATION VALVE	TB1, No. 4	MID 16, 4-71	3-203-4
2E21	ISOLATION VALVE	TB1, No. 5	MID 16, 4-71	3-203-5
2E22	ISOLATION VALVE	TB1, No. 6	MID 16, 4-71	3-203-6
2E23	ISOLATION VALVE	TB1, No. 7	MID 16, 4-71	3-203-7
2E24	ISOLATION VALVE	TB1, No. 8	MID 16, 4-71	3-203-8
2E26	SMOKE DETECTOR, SUBSTATION	TB2, No. 1	MID 16, 4-71	3-203-9
2E27	FIRE CALL BOXES, SUBSTATION	TB2, No. 2	MID 16, 4-71	3-203-10
	SD AT "FACP"	TB2, No. 3	MID 16, 4-71	3-203-11
	SD RM 146A/146X	TB2, No. 4	MID 16, 4-71	3-203-12
	RISER LOW AIR RM 146X	TB2, No. 5	MID 16, 4-71	3-203-13
	PREACTION WFS RM 146X	TB2, No. 6	MID 16, 4-71	3-203-14
	VALVE SUPERVISION RM 146X	TB2, No. 7	MID 16, 4-71	3-203-15
	FCB RM 146X	TB2, No. 8	MID 16, 4-71	3-203-16

OLD ADDRESS	DESCRIPTION	MID-16 TERMINATION	MODULE TYPE & NO. 2	MXL 03-64C ADDRESS
	NOT USED	TB1, No. 1	MID 16, NO.2	3-203-33
	NOT USED	TB1, No. 2	MID 16, NO.2	3-203-34
2C67	WATERFLOW, ZONE 6 NO. RISER	TB1, No. 3	MID 16, NO.2	3-203-35
2C68	WATERFLOW, ZONE 7-71A AND PUMP PAD	TB1, No. 4	MID 16, NO.2	3-203-36
2C69	WATERFLOW, ZONE 2 SOUTH RISER	TB1, No. 5	MID 16, NO.2	3-203-37
2C70	WATERFLOW-ZONE 1 ROOMS 252-283 & HALLS	TB1, No. 6	MID 16, NO.2	3-203-38
2C71	WATER FLOW,ZONE 11-CAVES L,M,N,P, & R	TB1, No. 7	MID 16, NO.2	3-203-39
2C72	WATERFLOW, ZONE 3	TB1, No. 8	MID 16, NO.2	3-203-40
2C73	WATERFLOW, ZONE 4	TB2, No. 1	MID 16, NO.2	3-203-41
	NOT USED	TB2, No. 2	MID 16, NO.2	3-203-42
2C75	WATERFLOW, ZONE 8	TB2, No. 3	MID 16, NO.2	3-203-43
2C76	WATERFLOW, SPRINKLERS-BLDG.	TB2, No. 4	MID 16, NO.2	3-203-44
2C77	WATERFLOW, ZONE 9	TB2, No. 5	MID 16, NO.2	3-203-45
2C78	WATERFLOW, ZONE 10	TB2, No. 6	MID 16, NO.2	3-203-46
2C79	FIRE SMOKE DETECTOR	TB2, No. 7	MID 16, NO.2	3-203-47
2C80	NOT USED	N/A	N/A	3-203-48

OLD ADDRESS	DESCRIPTION	MID-16 TERMINATION	MODULE TYPE & NO. 3	MXL 03-64C ADDRESS
2C49	FIRE CALL BOXES, ZONE 8	TB1, No. 1	MID 16, NO.3	3-203-17
2C50	FIRE CALL BOXES, ZONE 6 & 7	TB1, No. 2	MID 16, NO.3	3-203-18
2C51	FIRE CALL BOXES, ZONE 5	TB1, No. 3	MID 16, NO.3	3-203-19
2C52	FIRE CALL BOXES, ZONE 4	TB1, No. 4	MID 16, NO.3	3-203-20
2C53	FIRE CALL BOXES, ZONE 3	TB1, No. 5	MID 16, NO.3	3-203-21
2C54	HEAT DETECTORS & FCB	TB1, No. 6	MID 16, NO.3	3-203-22
2C55	FCB'S HEAT & DUCT DETECTOR	TB1, No. 7	MID 16, NO.3	3-203-23
	SD 126, 126A, 126B, 127, 195	TB1, No. 8	MID 16, NO.3	3-203-24
	~~DUCT SD RM 146A~~	~~TB2, No. 1~~	~~MID 16, NO.3~~	~~3-203-25~~
	SD UTILITY RM 295	TB2, No. 2	MID 16, NO.3	3-203-26
	HSSD LASER BAY 146/CAVE 146C	TB2, No. 3	MID 16, NO.3	3-203-27
~~2C60~~	~~HEAT DETECTORS RM 103~~	~~TB2, No. 4~~	~~MID 16, NO.3~~	~~3-203-28~~
2C61	SD'S DUCT DETECTORS, AHU-32	TB2, No. 5	MID 16, NO.3	3-203-29
2C62	NOT USED	TB2, No. 6	MID 16, NO.3	3-203-30
2C63	SMOKE DETECTORS	TB2, No. 7	MID 16, NO.3	3-203-31
	NOT USED	TB2, No. 8	MID 16, NO.3	3-203-32

DETAIL 1
4B77E139

C HYT HYT – 04/29/10 BELLA PROJECT
B AD LDD MCD 12/12/07 AS-BUILT RECORD DRAWING
A AD LDD MCD 03/13/06 REVISED FOR MXL COPPER LOOP

REV.	DATE	DESCRIPTION	DRAWN	CHECKED
1	10/21/10	RESPONSE TO LBNL FM COMMENTS	HYT	HYT

KEY PLAN

CLIENT
BERKELEY LAB

PROJECT
BUILDING 71
BERKELEY LAB LASER ACCELERATOR (BELLA)
CONVENTIONAL FACILITIES

M+W GROUP
M+W U.S., Inc.
49 Stevenson Street, Suite 700
San Francisco, CA 94105
Telephone: (415) 442-1881
Fax: (415) 442-1882

HYT Corporation
Fire Protection Engineers
and Consultants
3498 Clayton Road - Suite 101
Concord, California 94519
Phone: (925) 681-2731

SHEET TITLE
FIRE ALARM MOI/MID MODULE ARRANGEMENT AND PM-32, LOOP NO. 3

	DATE	NAME	PROJ. NO.	PROJ. PHASE
DRAWN	04/21/2010	DWH	12092	FINAL
CHECKED	04/21/2010	BBT		
ISSUED/APPROVE	05/26/2010		SHEET NO.	REV.
SCALE/SHT. SIZE	AS NOTED		FA-005	
CTB FILE	LBNL_B&W_Full			

FOR CONSTRUCTION

© Bell Zinner. All rights reserved. Reproduction in whole or in part is prohibited without the written consent of the copyright owner.