FIRE ALARM TERMINAL CABINET D (FATC-D) WIRING LAYOUT

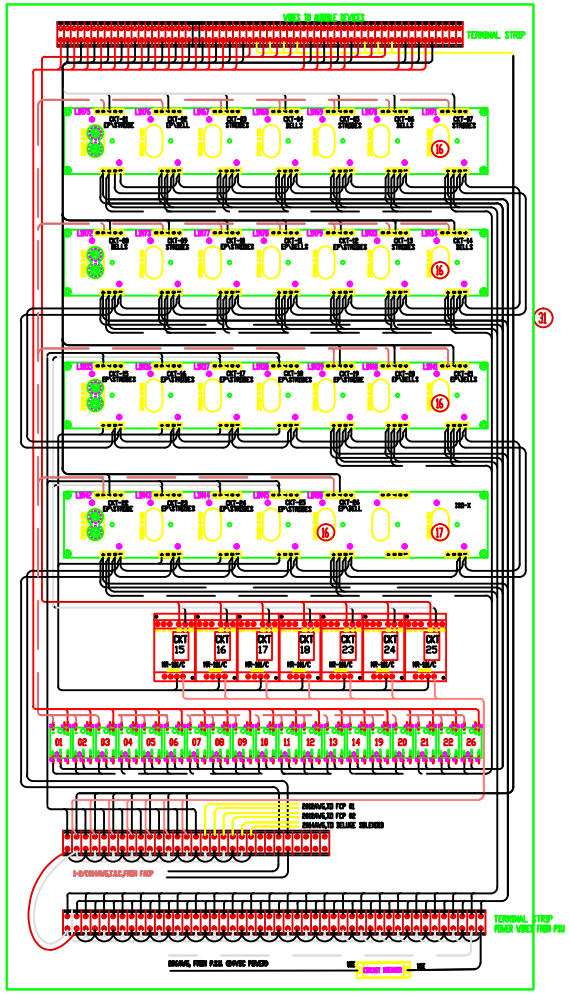

FIRE ALARM TERMINAL CABINET C (FATC-C) WIRING LAYOUT

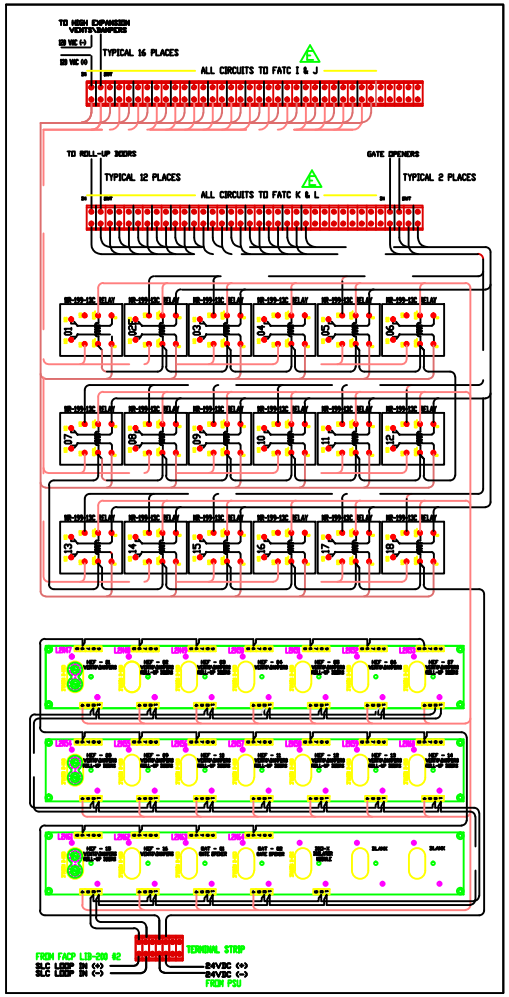

TYPICAL 120VAC CIRCUIT SUPERVISION WIRING DETAIL

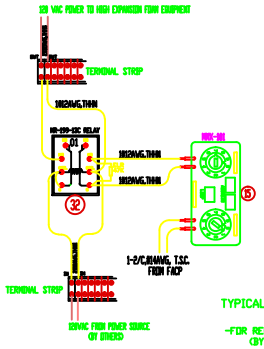

ROLL-UP DOOR OPENER DETAIL

TYPICAL ROLL UP DOOR CONNECTION (TO CLOSE) 12 PLACES

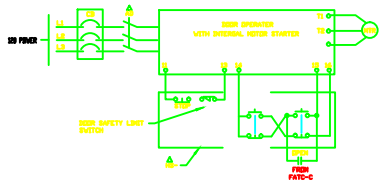

-FOR REFERENCE ONLY-
(BY OTHERS)

GATE OPENER DETAIL

TYPICAL GATE OPENER CONNECTION (TO CLOSE) 2 PLACES

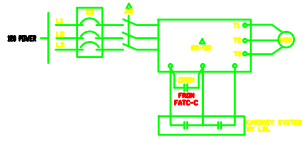

-FOR REFERENCE ONLY-
(BY OTHERS)

TRI-SIGNAL, INC.
CLAYTON AVENUE
CLAYTON, CA 94517
PHONE: (925)672-1191
FAX: (925)672-2705
LICENSE: 0660879

T. NELSON
W. CORCIO

UNIVERSITY OF CALIFORNIA, BERKELEY
LAWRENCE BERKELEY LABORATORY PLACERS
HAZARDOUS WASTE HANDLING FACILITY
BERKELEY, CA.

FATC-C & FATC-D
WIRING & DETAILS
BUILDING FIRE ALARM DETECTION &
AUTO FIRE SUPPRESSION SYSTEM

94-171-015 4N85E052E

NOT TO SCALE 15 OF 16

REVISIONS