FIRE ALARM TERMINAL CABINETS FATC-A, -E & -F LAYOUTS

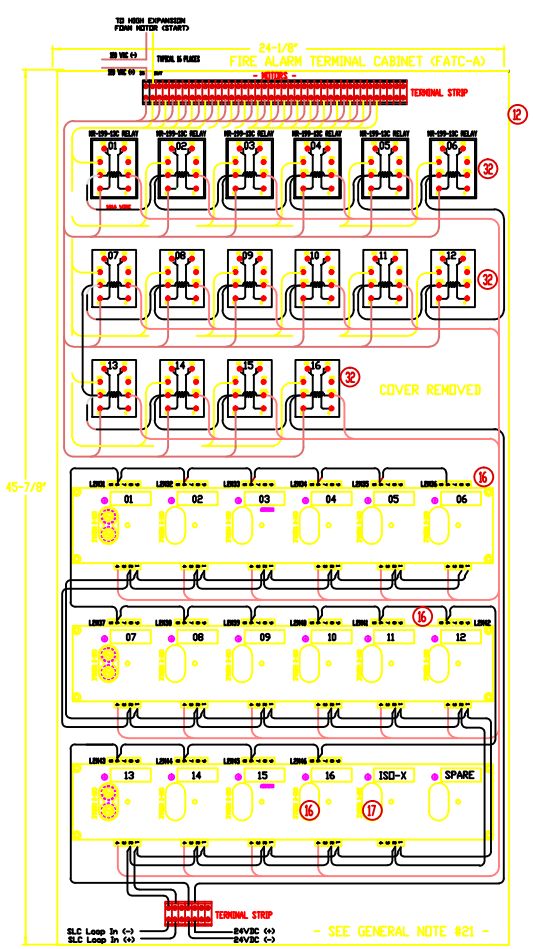

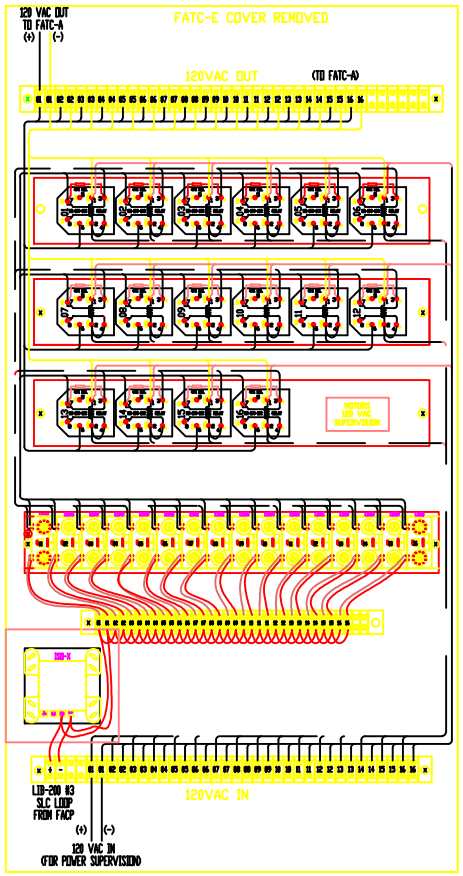

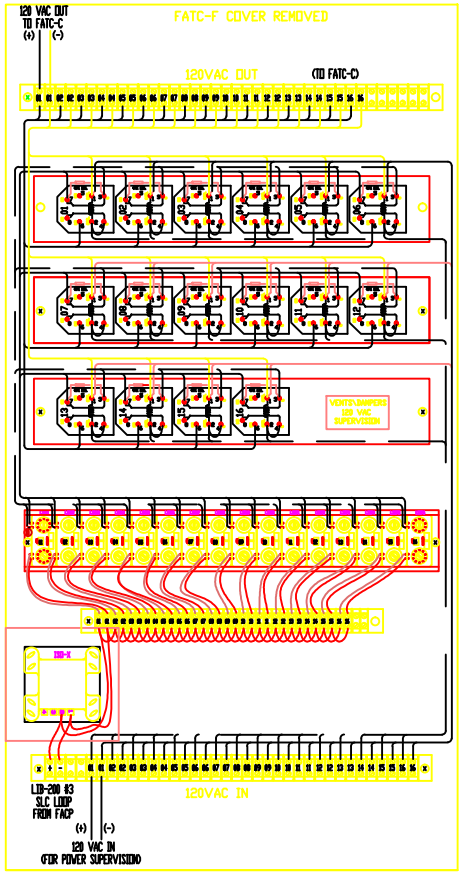

TRI-SIGNAL, INC.
FIRE SAFETY SYSTEMS
6500 SAN PABLO AVE.
OAKLAND, CA. 94608
PHONE:(510)601-0137-1370
FAX: (510)601-0137-0800
F.C.C.NUMBER: 0000-0000

T. NELSON
W. CORCID

UNIVERSITY OF CALIFORNIA, BERKELEY
LAWRENCE BERKELEY LABORATORY BUILDING
HAZARDOUS WASTE HANDLING FACILITY
BERKELEY, CA

FATC A, E, F, LAYOUTS

BUILDING FIRE ALARM DETECTION & AFFF FIRE SUPPRESSION SYSTEM

94-171-001 4N85E051E

NONE 14 OF 16

REVISIONS