ACM-8R RELAY TERMINAL ASSIGNMENTS

ACM-8R RELAY ASSIGNMENTS

SOFTWARE ZONE	TYPE I.D.	CONTROL BY EVENT	ALPHANUMERIC LABEL (20 characters max.)	ANNUNCIATOR MAPPING	SIGNAL SENT
Z3	FZON	( )	MANUAL PULL/BLDG. 85	A1P1	ALARM
Z4	FZON	( )	HEF RELEASE/PULL ST.	A1P2	ALARM
Z5	FZON	( )	HEAT DET./HEF AREA 1	A1P3	ALARM
Z6	FZON	( )	HEAT DET./HEF AREA 2	A1P4	ALARM
Z7	FZON	( )	HEAT DET./HEF AREA 3	A1P5	ALARM
Z8	FZON	( )	HEAT DET./HEF AREA 4	A1P6	ALARM
Z9	FZON	( )	HEAT DET./HEF AREA 5	A1P7	ALARM
Z10	FZON	( )	HEAT DET./HEF AREA 6	A1P8	ALARM
Z11	FZON	( )	HEAT DET./HEF AREA 7	A1P9	ALARM
Z12	FZON	( )	HEAT DET./HEF AREA 8	A1P10	ALARM
Z13	FZON	( )	HEAT DET./HEF AREA 9	A1P11	ALARM
Z14	FZON	( )	HEAT DET./HEF AREA 10	A1P12	ALARM
Z15	FZON	( )	HEAT DET./HEF AREA 11	A1P13	ALARM
Z16	FZON	( )	HEAT DET./HEF AREA 12	A1P14	ALARM
Z17	FZON	( )	HEAT DET./HEF AREA 13	A1P15	ALARM
Z18	FZON	( )	HEAT DET./HEF AREA 14	A1P16	ALARM
Z19	FZON	( )	HEAT DET./HEF AREA 15	A1P17	ALARM
Z20	FZON	( )	HEAT DET./HEF AREA 16	A1P18	ALARM
Z21	FZON	( )	SMOKE DET / BLDG. 85	A1P19	ALARM
Z22	FZON	( )	DUCT DET / BLDG. 85	A1P20	ALARM
Z23	FZON	( )	FLOW SWITCH/BLDG. 85	A1P21	ALARM
Z24	FZON	( )	TAMPER SWITCH/BLD 85	A1P22	TROUBLE
Z25	FZON	( )	FOAM REL/PULL - HV14	A1P23	ALARM

SOFTWARE ZONE	TYPE I.D.	CONTROL BY EVENT	ALPHANUMERIC LABEL (20 characters max.)	ANNUNCIATOR MAPPING	SIGNAL SENT
Z26	FZON	( )	HEAT DETECTOR - HV14	A1P24	ALARM
Z27	FZON	( )	GLOVE BOX/HEAT DET.	A1P25	ALARM
Z28	FZON	( )	PULL ST/OUT BLD/YARD	A1P26	ALARM
Z29	FZON	( )	SMOKE DET/OUT BLDG.	A1P27	ALARM
Z30	FZON	( )	LOW FOAM CONCENTRAT.	A1P28	TROUBLE
Z31	FZON	( )	MID/FOAM CONCENTRAT.	A1P29	TROUBLE
Z32	FZON	( )	HIGH/FOAM CONCENTRAT	A1P30	TROUBLE
Z33	FZON	( )	TAMPER SWITCH-HV14	A1P31	TROUBLE
Z34	FZON	( )	AC POWER FAIL/FACP	A1P32	TROUBLE
Z35	FZON	( )	SUPP. SYSTEM - HV8	A1P33	ALARM
Z36	FZON	( )	SUPP. SYSTEM - HV9	A1P34	ALARM
Z37	FZON	( )	SUPP. SYSTEM - HV10	A1P35	ALARM
Z38	FZON	( )	SUPP. SYSTEM - HV11	A1P36	ALARM
Z39	FZON	( )	SUPP. SYSTEM - HV12	A1P37	ALARM
Z40	FZON	( )	SUPP. SYSTEM - HV13	A1P38	ALARM
Z41	FZON	( )	SUPP. SYSTEM - HV8	A1P39	ALARM
Z42	FZON	( )	SUPP. SYSTEM - S 1	A1P40	ALARM
Z43	FZON	( )	HV8 SUPERVISORY SIG.	A1P41	TROUBLE
Z44	FZON	( )	HV9 SUPERVISORY SIG.	A1P42	TROUBLE
Z45	FZON	( )	HV10 SUPERVISORY SIG	A1P43	TROUBLE
Z46	FZON	( )	HV11 SUPERVISORY SIG	A1P44	TROUBLE
Z47	FZON	( )	HV12 SUPERVISORY SIG	A1P45	TROUBLE
Z48	FZON	( )	HV13 SUPERVISORY SIG	A1P46	TROUBLE

MAPPING POINT	ACM-8R ALARM/TROUBLE
A1P01-P04	1 - 4
A1P05-P08	5 - 8
A1P09-P12	9 - 12
A1P13-P16	13 - 16
A1P17-P20	17 - 20
A1P21-P24	21 - 24
A1P25-P28	25 - 28
A1P29-P32	29 - 32
A1P33-P36	33 - 36
A1P37-P40	37 - 40
A1P41-P44	41 - 44
A1P45-P48	45 - 48
A1P49-P52	49 - 52
A1P53-P56	53 - 56
A1P57-P60	57 - 60
A1P61-P64	61 - 64

AM-2020 / MX-316 - CONNECTIVITY (FATC-B)

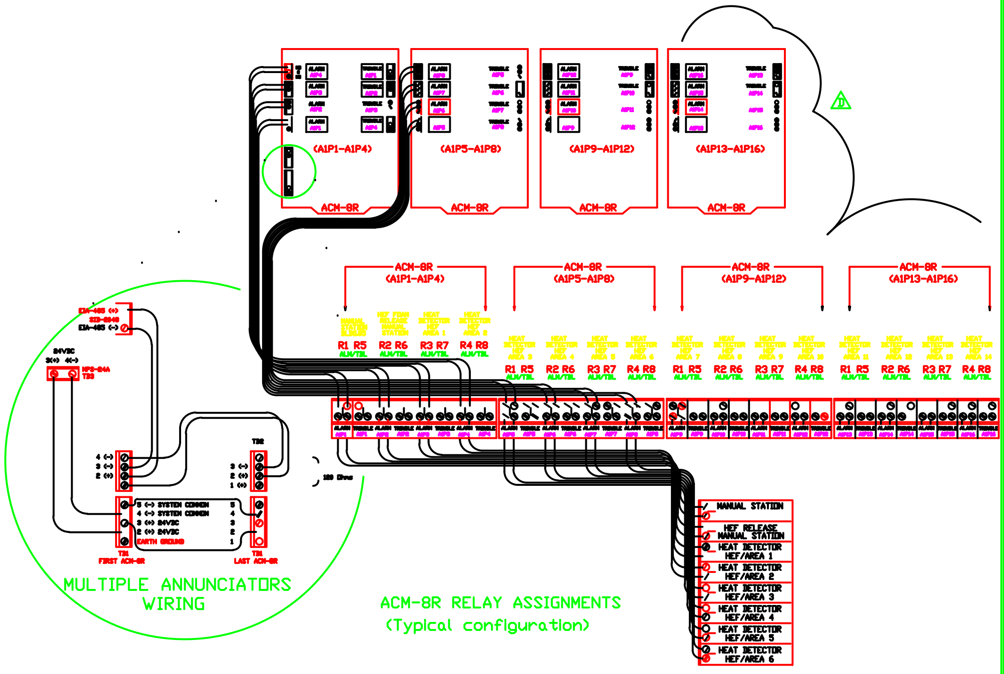

MULTIPLE ANNUNCIATORS WIRING

ACM-8R RELAY ASSIGNMENTS (Typical configuration)

POWER SUPPLY (PSU) CALCULATIONS

A36F-50-24V-ABD1 POWER SUPPLY

CIRCUIT #	NUMBER OF DEVICES	TYPE OF DEVICES	CURRENT DRAW (AMPS)	TOTAL CURRENT (AMPS)
FLAMMABLE STORAGE BLDG.				
CIRCUIT #1	1	EP/STROBE	1.25	1.25
CIRCUIT #2	1	EP/BELL	0.21	0.21
YARD AREA #1				
CIRCUIT #12	1	EP\STROBE	1.25	1.25
CIRCUIT #26	1	EP\BELL	0.21	0.21
YARD AREA #3				
CIRCUIT #10	1	EP\STROBE	1.25	1.25
CIRCUIT #11	1	EP\BELL	0.21	0.21
BLDG.85 - 3RD. FLOOR				
CIRCUIT #3	2	STROBES	0.093	0.186
CIRCUIT #4	2	BELLS	0.030	0.060
BLDG.85 - 2ND. FLOOR				
CIRCUIT #5	4	STROBES	0.093	0.372
CIRCUIT #6	4	BELLS	0.030	0.12
CIRCUIT #7	3	STROBES	0.093	0.279
CIRCUIT #8	3	BELLS	0.030	0.090
CIRCUIT #9	1	STROBE	0.100	0.1
CIRCUIT #27	1	STROBE	0.100	0.1
CIRCUIT #28	1	STROBE	0.100	0.1
CIRCUIT #29	1	STROBE	0.100	0.1
CIRCUIT #30	1	STROBE	0.100	0.1
CIRCUIT #31	1	STROBE	0.100	0.1
CIRCUIT #32	1	STROBE	0.100	0.1
BLDG.85 - 1ST. FLOOR				
CIRCUIT #13	2	STROBES	0.093	0.186
CIRCUIT #14	2	BELLS	0.030	0.060
CIRCUIT #15	2	EP/STROBES	1.25	2.50
CIRCUIT #16	1	EP/STROBE	1.25	1.25
CIRCUIT #17	2	EP/STROBES	1.25	2.50
CIRCUIT #18	2	EP/STROBES	1.25	2.50
CIRCUIT #19	2	EP/STROBES	1.25	2.50
CIRCUIT #20	3	EP/BELLS	0.21	0.63
CIRCUIT #21	3	EP/BELLS	0.21	0.63
CIRCUIT #22	1	EP/STROBES	1.25	1.25
CIRCUIT #23	1	EP/STROBE	1.25	1.25
CIRCUIT #24	2	EP/STROBES	1.25	2.50
CIRCUIT #25	2	EP/STROBES	1.25	2.50
CIRCUIT #33	1	EP/STROBE	1.25	1.25
CIRCUIT #34	1	EP/STROBE	1.25	1.25
CIRCUIT #35	1	EP/STROBE	1.25	1.25
CIRCUIT #36	1	EP/STROBE	1.25	1.25

TOTAL AMPERAGE = 30.319

BATTERY CALCULATIONS (FACP)

AM-2020 SYSTEM CURRENT DRAW CALCULATIONS

DEVICE TYPE	# OF DEVICES	MULTIPLY BY	CURRENT IN AMPS		TOTAL CURRENT
DE-2020	1	X	.110	=	.110
MPS-24A	1	X	.104	=	.104
ICA-4L	1	X	.002	=	.002
LID-200	3	X	.049	=	.147
SIB-2048	1	X	.055	=	.055
SDX-551	38	X	.00020	=	.0076
FDX-551	11	X	.00020	=	.0022
MMX-101	102	X	.00030	=	.0306
BGX-101L	5	X	.00030	=	.0015
CMX-2	71	X	.00030	=	.0213
DHX-501	6	X	.015	=	.090
ISO-X	10	X	.00045	=	.0045
LCD-80	3	X	.050	=	.15
ACM-8R	16	X	.030	=	.48
SECONDARY STANDBY LOAD				=	1.21 AMPS

MAXIMUM SECONDARY POWER FIRE ALARM CURRENT DRAW

DEVICE TYPE	# OF DEVICES	MULTIPLY BY	CURRENT IN AMPS	TOTAL CURRENT
MPS-24A	1	X	6.0	6.0

SECONDARY FIRE ALARM LOAD = 6.00 AMPS

SECONDARY POWER STANDBY AND FIRE ALARM LOAD

SECONDARY NON-FIRE ALARM LOAD		REQUIRED SECONDARY NON-FIRE ALARM STANDBY TIME (24 OR 60 HOURS)		TOTAL AMP HOURS
1.21	X	24	=	29.20
SECONDARY FIRE ALARM LOAD		REQUIRED FIRE ALARM TIME (0.084 FOR 5 MINUTES) (0.25 FOR 15 MINUTES)		TOTAL AMP HOURS
30.319	X	0.084	=	2.5467
		TOTAL	=	31.8267
		X 1.2 DERATING FACTOR	=	38.192
		TOTAL SECONDARY AMPERE HOURS REQUIRED	=	39.00

PROVIDE (2) PS12250, 12V-50 A. H. BATTERIES

CONDUIT FILL CALCULATIONS

PERCENT AREA OF CONDUIT AND OF TUBING

TABLE 4 (N.E.C.)
FOR CONDUCTORS OF DIFFERENT SIZES

CONDUIT TRADE SIZE	INTERNAL DIAMETER (IN)	100% CONDUIT FILL	40% CONDUIT FILL
1/2	0.622	0.30	0.12
3/4	0.824	0.53	0.21
1	1.049	0.86	0.34
1 1/4	1.380	1.50	0.60
1 1/2	1.610	2.04	0.82
2	2.067	3.36	1.34
2 1/2	2.469	4.79	1.92
3	3.068	7.38	2.95
3 1/2	3.548	9.90	3.96
4	4.026	12.72	5.09
5	5.047	20.00	8.00
6	6.065	28.89	11.56

SAMPLE CALCULATIONS

CROSS-SECTIONAL AREA = DIAMETER (IN MILS SQUARED) X 0.7854

A = (D) X (D) X 0.7854

WHERE D = OUTSIDE DIAMETER OF A CONDUCTOR (INCLUDING INSULATION)

1 - 2C/#14 AWG TWISTED SHIELDED CABLE (REFERENCE WEST PENN WIRE CATALOG #995)

D = 0.211 INCH

A = (0.211) X (0.211) X 0.7854 = 0.035 SQ. IN.

#12 THHN

D = 0.122 IN.

A = (0.122) X (0.122) X 0.7854 = 0.0117 SQ. IN.

#14 THHN

D = 0.108 IN.

A = (0.108) X (0.108) X 0.7854 = 0.0092 SQ. IN.

EX.
1 - 2C/#14 AWG TWISTED SHIELDED CABLE
8#12 THHN
4#14 THHN

0.035 + 0.0117 (8) + 0.0092 (4) = 0.1654 SQ. IN.

3/4" CONDUIT

CONDUIT FILL (SEE GENERAL NOTES #20)

MAXIMUM NUMBER OF CONDUCTORS IN TRADE SIZES OF CONDUIT OR TUBING
(BASED ON TABLE 1, CHAPTER 9 NEC)

WIRE TYPE	CONDUCTOR SIZE / AWG	CONDUIT TRADE SIZE (IN INCHES) 1/2	3/4	1	1 1/4	1 1/2
THHN	14	13	24	39	69	94
	12	10	18	29	51	70

WIRING COLOR CODE

ALL WIRING SHALL BE IN ACCORDANCE WITH THE FOLLOWING (U.L.) COLOR CODE:

NOTIFICATION APPLIANCE CIRCUITS	WHITE AND BLACK
SUPERVISION	YELLOW
DOOR/GATE RELEASE	GRAY

TRI-SIGNAL INCORPORATED
TRI-SIGNAL, INC
1545 GARDENA AVE.
GLENDALE, CA 91204
PHONE (818) 247-1191
FAX (818) 240-2998
LICENSE #000676

DRAWN BY: T. NELSON
CHECKED: W. CORCIO
APPROVED:
TN 11-09-95

UNIVERSITY OF CALIFORNIA, BERKELEY
LAWRENCE BERKELEY LABORATORY, BLDG.85
HAZARDOUS WASTE HANDLING FACILITY
BERKELEY, CA

RELAY ASSIGNMENTS, BATTERY CALCS
CONDUIT FILL CALCS
BUILDING FIRE ALARM DETECTION &
AFFF FIRE SUPPRESSION SYSTEM

94-171-012 4N85E049D
AS SHOWN 12 OF 16

REVISIONS