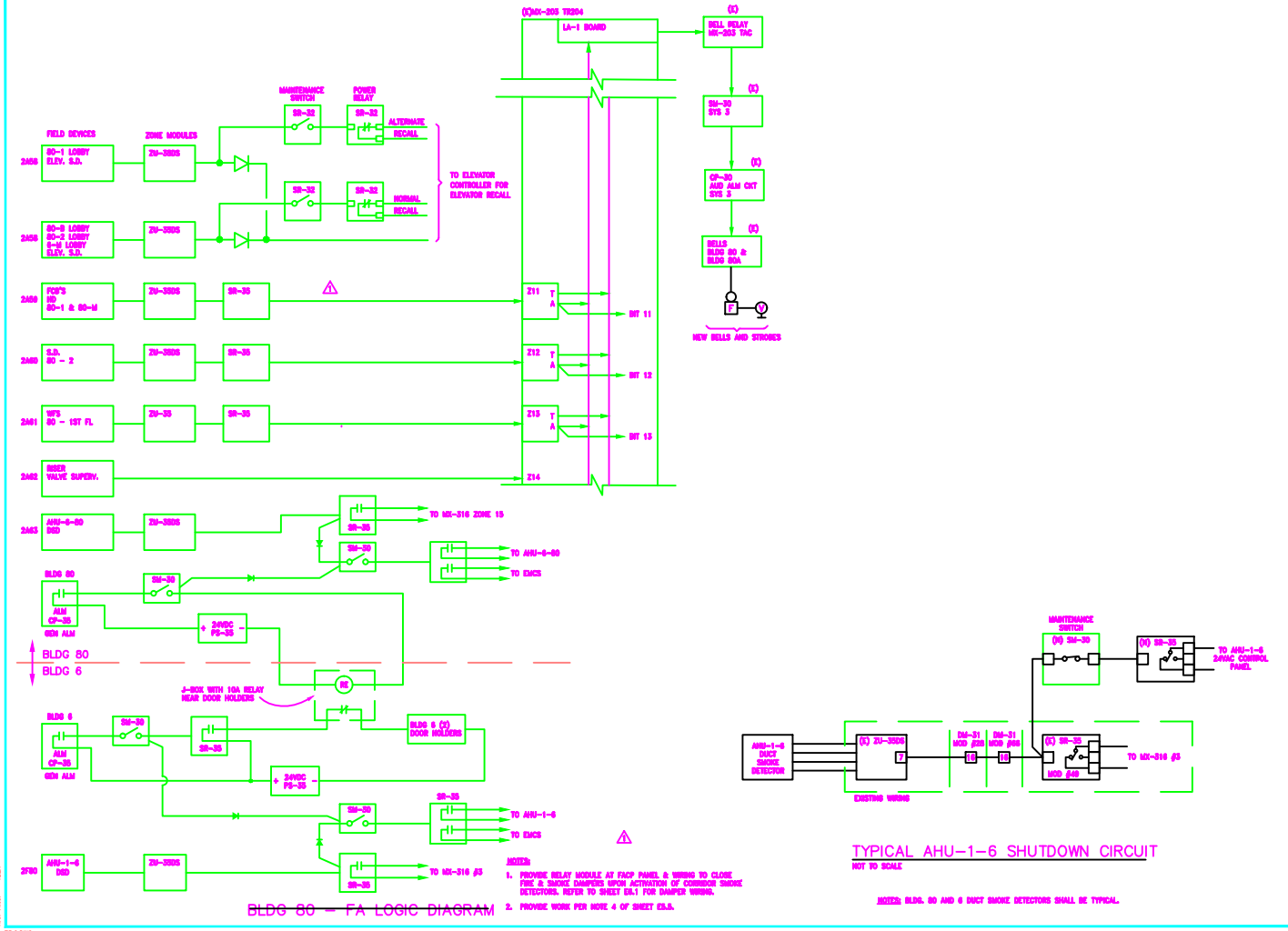

BLDG 80 – FA LOGIC DIAGRAM

TYPICAL AHU-1-6 SHUTDOWN CIRCUIT

NOT TO SCALE

NOTES: BLDG. 80 AND 6 DUCT SMOKE DETECTORS SHALL BE TYPICAL.

Date: 2-14-95
File: P:\PROJECT\4943-01\E5.6.DWG
Xref Files: - TB1
Xref Files: - TB1X
Date: 2-14-95

BASING
4943.01 (ALS); 2-23-95; TW

Architects
Planners
Interior Designers

35 New Montgomery St.
Suite 600
San Francisco, CA 94105
Telephone: 415.777.5444
Fax: 415.777.5044

PROJECT TITLE

ALS STRUCTURAL BIOLOGY SUPPORT FACILITIES

LAWRENCE BERKELEY LABORATORY
University of California
Berkeley, CA

CONSULTANT

GAYNER

ISSUE	DESCRIPTION	DATE
1	BIDS & DSA	9/13/94
2	BIDS & DSA 11/30/94	
3	FINAL ISSUE	2/9/95
A	ORDER ADD. REVISION	9/26/95
4	RECORD DWGS.	2/14/97

OWNERSHIP OF DOCUMENTS
THIS DRAWING AND SPECIFICATION, AS AN INSTRUMENT OF SERVICE, IS THE PROPERTY OF THE ARCHITECT.
© COPYRIGHT 1995

DRAWN BY JW
CHECKED BY AEM
SCALE NOT TO SCALE

SHEET TITLE

FIRE ALARM DIAGRAMS

SHEET NO.: E5.6

PROJECT NO.: 4943.01

CAD DWG NO. & PLOT DATE: LB-22-6 2/14/97