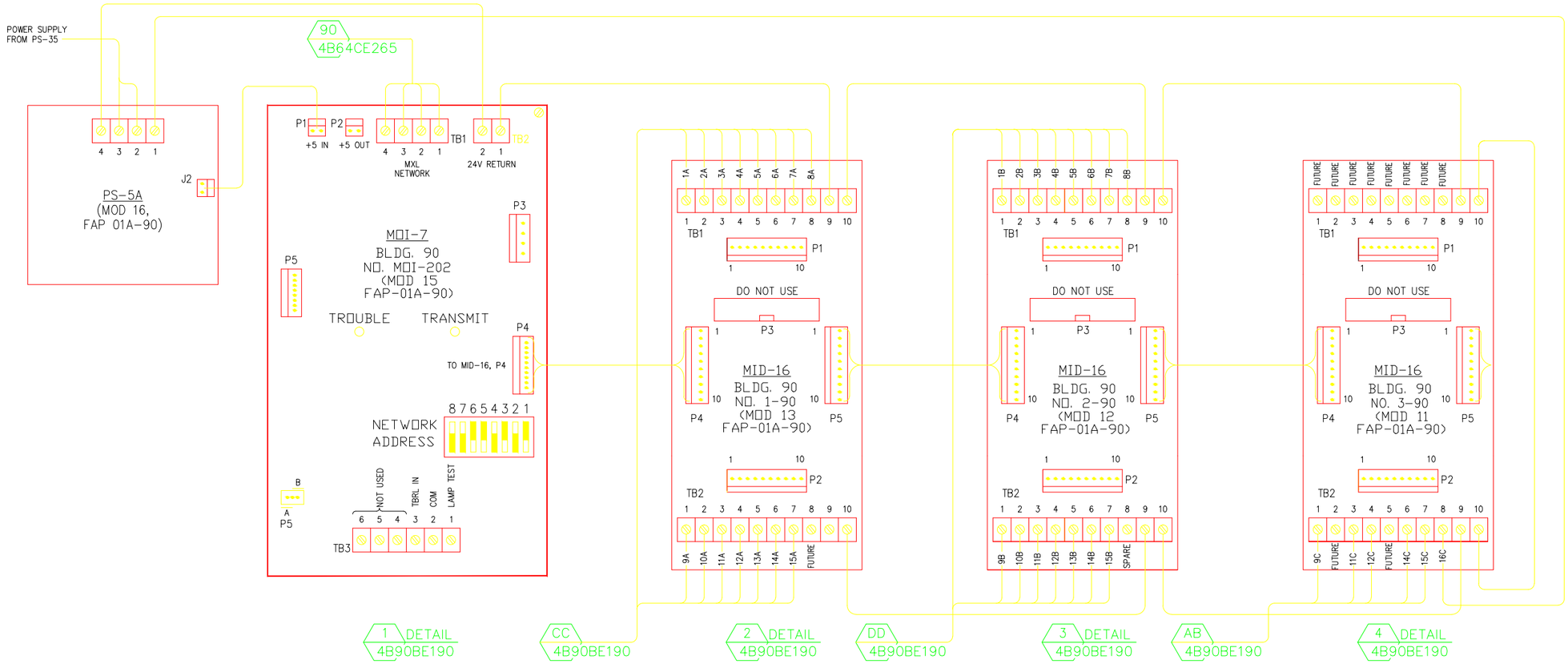

		OLD ADDRESS	DESCRIPTION	MID-16 TERMINATION	MODULE TYPE & NO.	MXL 03-64C ADDRESS
NEW	1	1H17 2	FCB, NEAR ROOM 0020	TB1, No. 1	MID 16, 1-90	1-202-1
NEW	2	1H18 2	FCB'S (2) - FIRST FLOOR NEAR ELEVATOR & NORTH ENTRANCE	TB1, No. 2	MID 16, 1-90	1-202-2
NEW	3	1H19 2	FCB, NEAR ROOM 2002	TB1, No. 3	MID 16, 1-90	1-202-3
NEW	4	1H20 2	FCB, NEAR ROOM 3034	TB1, No. 4	MID 16, 1-90	1-202-4
NEW	5	1H21 2	FCB, TOP OF CENTER STAIRS	TB1, No. 5	MID 16, 1-90	1-202-5
EXIST	6	1H22 4	ROOF DUCT DAMPER	TB1, No. 6	MID 16, 1-90	1-202-6
NEW	7	1H23 2	SD -ROOM 4035	TB1, No. 7	MID 16, 1-90	1-202-7
EXIST	8	1H24 2	1 DOOR HOLDING SMOKE DETECTOR NEAR 3147	TB1, No. 8	MID 16, 1-90	1-202-8
EXIST	9	1H25 4	B.90 SD, RM 20A, 20B (4)	TB2, N0. 1	MID 16, 1-90	1-202-9
EXIST	10	1H26 4	BASEMENT, 2nd & 3rd FLOORS NEAR ELEVATOR - RECALL	TB2, No. 2	MID 16, 1-90	1-202-10
NEW	11	1H27 2	WF, SPRINKLERS-BASEMENTS	TB2, No. 3	MID 16, 1-90	1-202-11
NEW	12	1H28 2	WF, SPRINKLERS-FISRT FLOOR	TB2, No. 4	MID 16, 1-90	1-202-12
NEW	13	1H29 2	WF, SPRINKLERS-SECOND FLOOR	TB2, No. 5	MID 16, 1-90	1-202-13
NEW	14	1H30 2	WF, SPRINKLERS-THIRD FLOOR	TB2, No. 6	MID 16, 1-90	1-202-14
NEW	15	1H31 2	WF, SPRINKLERS-FOURTH FLOOR	TB2, No. 7	MID 16, 1-90	1-202-15
	16	1H32	FUTURE / SPARE	TB2, No. 8	MID 16, 1-90	

		OLD ADDRESS	DESCRIPTION	MID-16 TERMINATION	MODULE TYPE & NO.	MXL 03-64C ADDRESS
NEW	1	1H33 4	SD-ABOVE SYSTEM 3 PANEL	TB1, No. 1	MID 16, 2-90	1-202-17
NEW	2	1H34 2	WATERFLOW - SPRINKLERS 1ST	TB1, No. 2	MID 16, 2-90	1-202-18
NEW	3	1H35 2	WATERFLOW - SPRINKLERS 2ND	TB1, No. 3	MID 16, 2-90	1-202-19
NEW	4	1H36 2	WATERFLOW - SPRINKLERS 3RD	TB1, No. 4	MID 16, 2-90	1-202-20
EXIST	5	1H37 4	FCB'S B90-B,C,F,G,K,P	TB1, No. 5	MID 16, 2-90	1-202-21
NEW	6	1H38 2	WATERFLOW - SPRINKLERS	TB1, No. 6	MID 16, 2-90	1-202-22
EXIST	7	1H39 2	FIRST FLOOR (NORTH WEST)	TB1, No. 7	MID 16, 2-90	1-202-23
EXIST	8	1H40 4	DETECTOR - LOADING DOCK	TB1, No. 8	MID 16, 2-90	1-202-24
EXIST	9	1H41 2	SMOKE DETECTORS	TB2, N0. 1	MID 16, 2-90	1-202-25
EXIST	10	1H42 2	SMOKE DETECTORS	TB2, No. 2	MID 16, 2-90	1-202-26
	11	1H43	SUPERVISION - RISER VALVES	TB2, No. 3	MID 16, 2-90	1-202-27
	12	1H44	SUPERVISION-ISO VALVES, BASEMENT	TB2, No. 4	MID 16, 2-90	1-202-28
	13	1H45	SUPERVISION-ISO VALVES, 1st. FLR	TB2, No. 5	MID 16, 2-90	1-202-29
	14	1H46	SUPERVISION-ISO VALVES, 2nd FLR	TB2, No. 6	MID 16, 2-90	1-202-30
	15	1H47	SUPERVISION-ISO VALVES, 3rd FLR	TB2, No. 7	MID 16, 2-90	1-202-31
	16	1H48	FUTURE / SPARE	TB2, No. 8	MID 16, 2-90	

	OLD ADDRESS	DESCRIPTION	MID-16 TERMINATION	MODULE TYPE & NO.	MXL 03-64C ADDRESS
	1H49	NOT USED	TB1, No. 1	MID 16, 3-90	
	1H50	NOT USED	TB1, No. 2	MID 16, 3-90	
	1H51	NOT USED	TB1, No. 3	MID 16, 3-90	
	1H52	NOT USED	TB1, No. 4	MID 16, 3-90	
	1H53	NOT USED	TB1, No. 5	MID 16, 3-90	
	1H54	NOT USED	TB1, No. 6	MID 16, 3-90	
	1H55	NOT USED	TB1, No. 7	MID 16, 3-90	
	1H56	NOT USED	TB1, No. 8	MID 16, 3-90	
9	1H57	SUPERVISION-ISO VALVES, 4th. FLR	TB2, No. 1	MID 16, 3-90	1-202-41
	1H58	NOT USED	TB2, No. 2	MID 16, 3-90	
11	1H59	SUPERVISION - ISO VALVES	TB2, No. 3	MID 16, 3-90	1-202-43
12	1H60	SUPERVISION - RISER VALVES	TB2, No. 4	MID 16, 3-90	1-202-44
	1H61	NOT USED	TB2, No. 5	MID 16, 3-90	
14	1H62	BYPASS SW. ROOM 4035	TB2, No. 6	MID 16, 3-90	1-202-46
15	1H63	TROUBLE, SYSTEM 3 PANEL	TB2, No. 7	MID 16, 3-90	1-202-47
16	1H64	M01 RIBBON UNPLUGGED	TB2, No. 8	MID 16, 3-90	

AS BUILT
REVISION
C
05/15/2009

REVISION NUMBER	DRAWN BY	CHECKED BY	APPR'D BY	DATE	REMARKS
C				5/15/09	AS BUILT
B				9/30/08	AS BUILT
A	AD	LDD	MCD	03/13/06	REVISED FOR MXL COPPER LOOP

PROFESSIONAL SEAL (IF REVISION, APPLIES ONLY TO REVISED WORK)

ISSUE (PROGRESS, ESTIMATE, BID, CONSTRUCTION, CONFORMED, REVISION, RECORD)

90
REPLACEMENT FIRE ALARM SYSTEM
MOI/MID MODULE ARRANGEMENT

UNIVERSITY OF CALIFORNIA
LAWRENCE BERKELEY NATIONAL LABORATORY
FACILITIES DIVISION

DRAWN BY	AD	DATE	4/8/2004
CHECKED BY	AD		4/8/2004
APPROVED BY	MCG		4/8/2004
CAD FILE PATH			
SCALE	Full		
DRAWING NO.	4B90E189C	SHEET	1 OF 1
PROJECT NO.	FB4010		