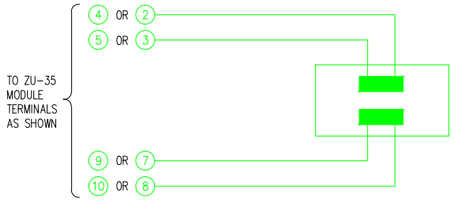

A MANUAL RELEASE STATION DETAIL

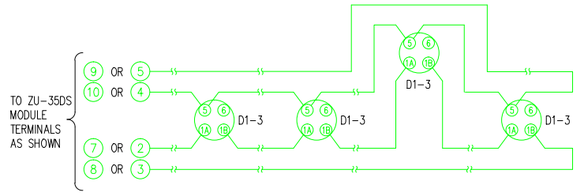

E SMOKE DETECTOR DETAIL

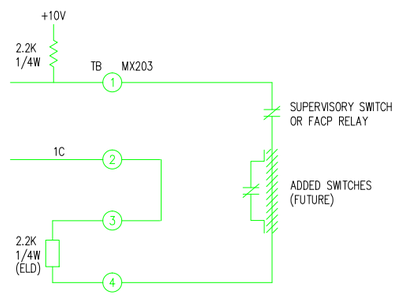

B SUPERVISORY SWITCH CONNECTIONS (STYLE 'B')

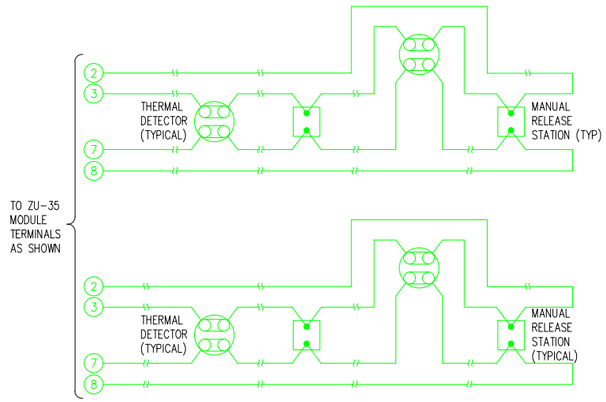

G THERMAL DETECTOR/MANUAL RELEASE STATION DETAIL

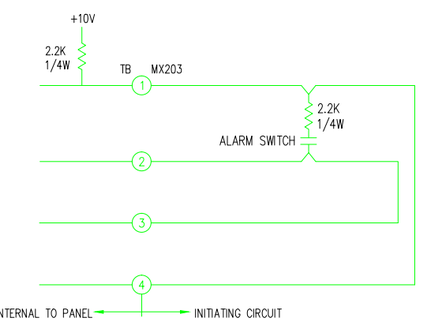

C WATERFLOW SWITCH CONNECTIONS (STYLE 'A-ST')

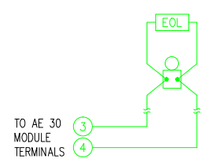

H HALON SIGNAL CIRCUIT-BELL

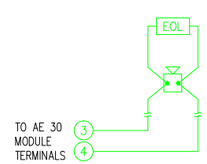

I HALON SIGNAL CIRCUIT-HORN

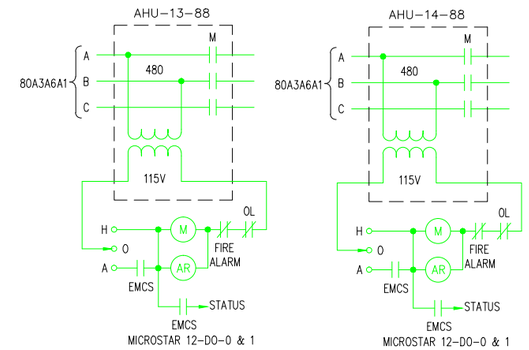

J AIR HANDLING UNIT-VENT S/D

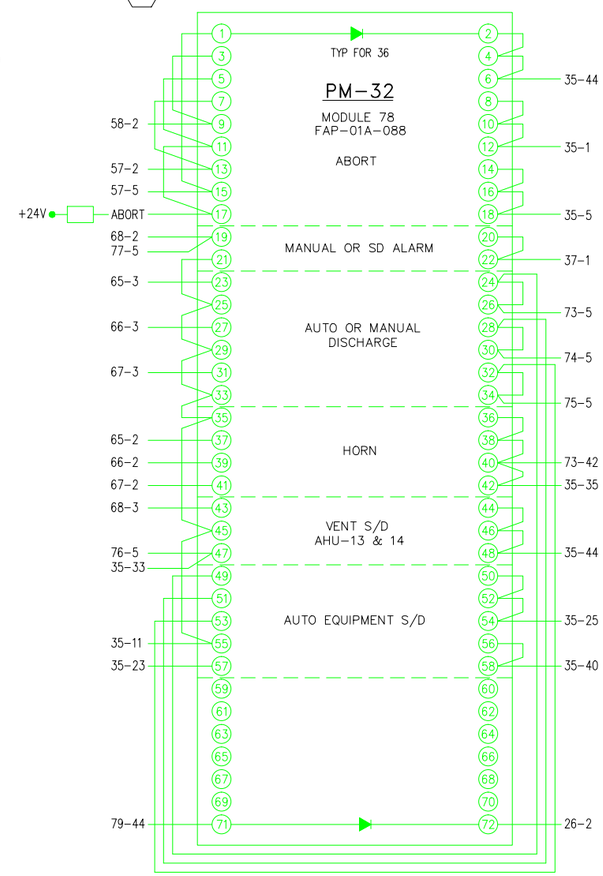

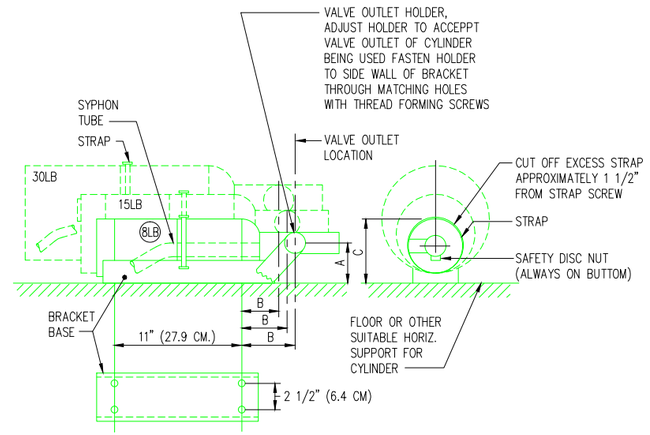

8-15-30 LB. CYLINDER HORIZONTAL MOUNT

CYLINDER SIZE	A	B	C	D	E
8 LB	3" (7.6 CM)	5" (12.7 CM)	5 1/2" (14 CM)	4" (10.2 CM)	17 7/8" (45.4 CM)
15 LB	4 1/16" (10.3 CM)	4 1/16" (10.3 CM)	7" (17.8 CM)	5 1/2" (14 CM)	19 1/4" (48.9 CM)
30 LB	4 11/16" (11.9 CM)	3 3/16" (8.1 CM)	8 3/16" (20.8 CM)	7" (17.8 CM)	24 7/8" (63.2 CM)
60 LB	5 5/16" (13.5 CM)	1 3/8" (3.5 CM)	9 3/16" (23.3 CM)	14" (35.6 CM)	34 7/8" (88.6 CM)

	APPROXIMATE WEIGHTS	
	CYLINDER FULLY CHARGED	BRACKET ASSEMBLIES FOR HORIZONTAL INSTALLATION
8 LB	23 1/2 LBS (10.7 KG)	2 LBS (0.9 KG)
15 LB	35 LBS (15.9 KG)	2 LBS (0.9 KG)
30 LB	59 LBS (26.8 KG)	2 LBS (0.9 KG)
60 LB	106 LBS (48.1 KG)	4 LBS (1.0 KG)

L 8 LB CYLINDER DETAIL

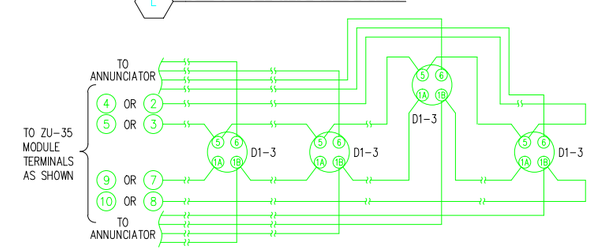

M SMOKE DETECTOR W/REMOTE ANNUNCIATOR DETAIL

NOTE:

THIS DWG IS AN AS BUILT DWG AND WAS FORMERLY STOP-FIRE, INC. DWG. No. 5895 SHEET 5 OF 12

REFERENCE DWGS:

4B88E054

DETAIL 4 / 4B88E068

REVISION NUMBER	DRAWN BY	CHECKED BY	APPR'D BY	DATE	REMARKS
H				05/15/09	AS BUILT
G				09/30/08	AS BUILT
F	AD	LDD	MCD	07/27/07	FIRE ALARM SYSTEM UP-GRADE
E	MRC	AD	MCG	05/07/04	PHASE III FIRE ALARM UPGRADE
D	LDD		MCG	9/28/99	FIELD VERIFIED AS-BUILT
C	LM		MCG	8/11/98	AUTOCAD CONVERSION
B	RB	BHS		4/91	AHU 5,6 & 7 DELETED, ADD AHU 13 & 14

88 FIRE ALARM SYSTEM
DEVICE WIRING AND DETAILS

UNIVERSITY OF CALIFORNIA LAWRENCE BERKELEY LABORATORY
FACILITIES DEPARTMENT

DRAWN BY LSR
DATE 11/1/19
CHECKED BY
APPROVED BY
CAD FILE PATH 00022498
SCALE Full
DRAWING NO. 4B88E070H
SHEET 1 OF 1
PROJECT NO. FB4010