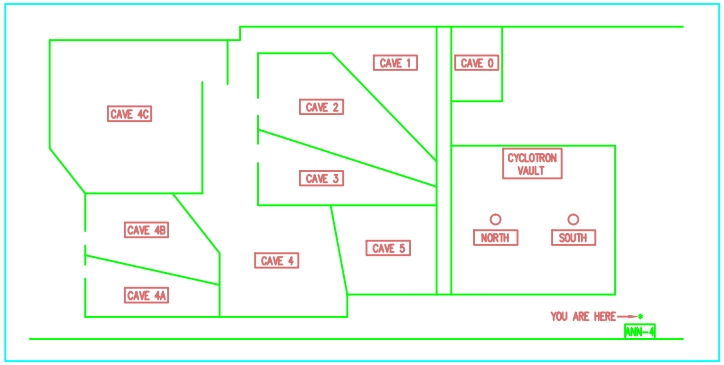

ANN-4

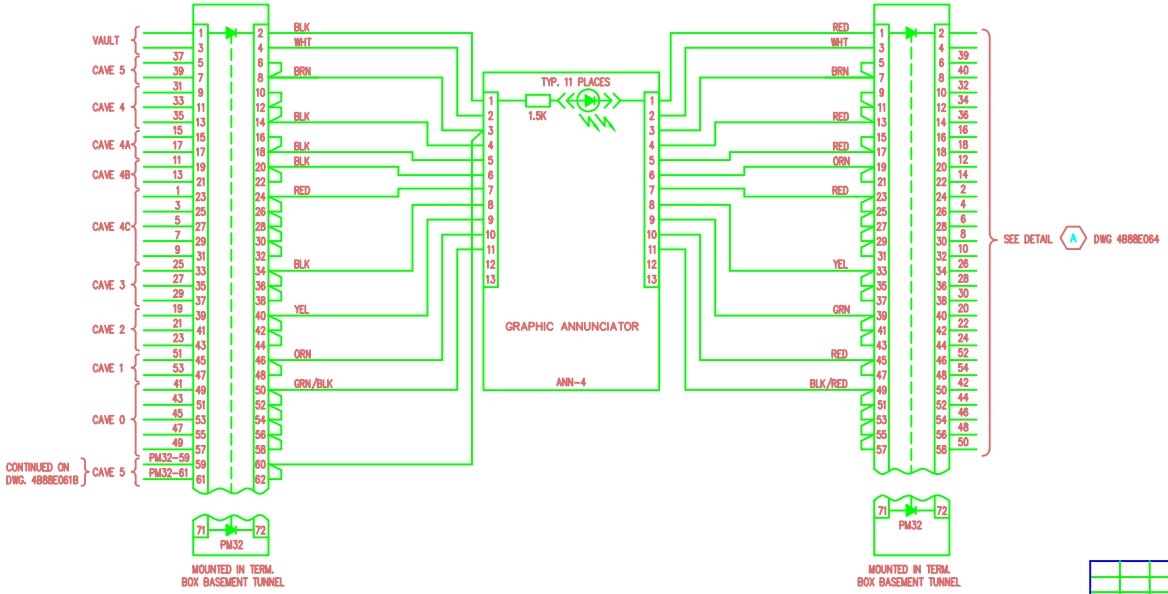

REFERENCE DWGS:

4B88E054

DISTRIBUTION LIST:

2-ELECTRIC SHOP B76 (FILE I & II)
1-B90J (FILE III)
1-STICK FILE B90J
ORIGINAL-FLAT FILE B90F

REVISION NUMBER	DRAWN BY	CHECKED BY	APPR'D BY	DATE	REMARKS
B	LM		MCG	8/25/88	AUTOCAD CONVERSION
A		MG		3/18/86	ADDED SMOKE DET. CAVE 5 (E) CONTR. HOUSE

88 FIRE ALARM SYSTEM
CAVE SMOKE DETECTORS &
GRAPHIC ANNUNCIATOR #4

UNIVERSITY OF CALIFORNIA LAWRENCE BERKELEY LABORATORY
FACILITIES DEPARTMENT

DRAWN BY	HW/LSR	DATE 08/01/84
CHECKED BY	HT	/ /
APPROVED BY		/ /
CAD FILE PATH	00007108	
SCALE	As Noted	
DRAWING NO.	4B88E065B	SHEET 1 OF 1
PROJECT NO.	153784	