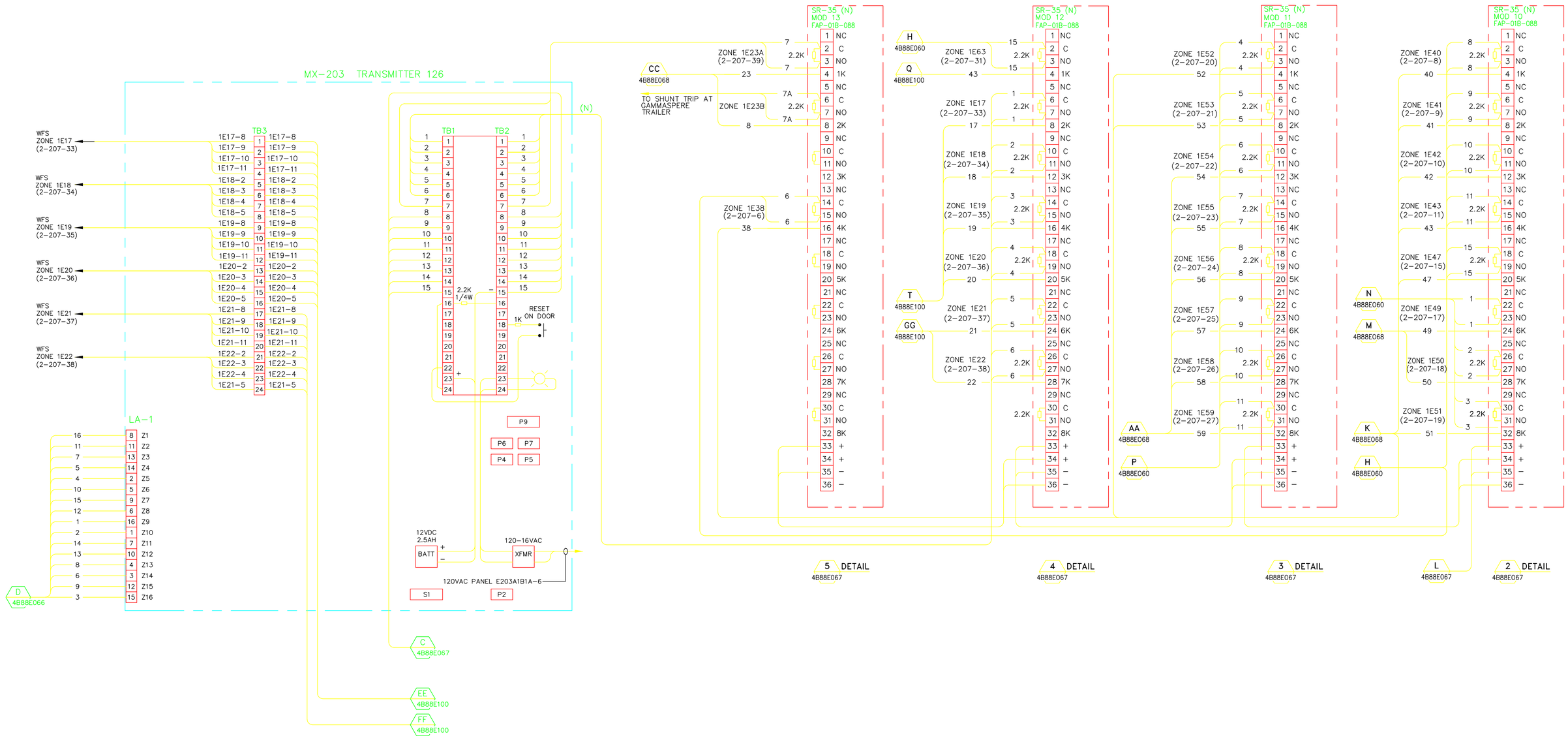

TITLE 2
CONSTRUCTION
J
7/20/2007

REVISION NUMBER	DRAWN BY	CHECKED BY	APPR'D BY	DATE	REMARKS
J	AD	LDD	MCD	07/20/07	FIRE ALARM SYSTEM UPGRADE
I	MRC	AD	MCG	06/10/04	PHASE III FIRE ALARM UPGRADE
H	LDD		MCG	9/27/99	FIELD VERIFIED AS-BUILT
G					REDRAWN ON AUTOCAD

PROFESSIONAL SEAL (IF REVISION, APPLIES ONLY TO REVISED WORK)

ISSUE (PROGRESS, ESTIMATE, BID, CONSTRUCTION, CONFORMED, REVISION, RECORD)

88 FIRE ALARM SYSTEM
MX-203 CAB. XMTR 126 & SR-35 RELAY
INTERCONNECTION DIAGRAM

UNIVERSITY OF CALIFORNIA
LAWRENCE BERKELEY NATIONAL LABORATORY
FACILITIES DIVISION

DRAWN BY LDD DATE 9/16/1999
CHECKED BY
APPROVED BY MCG 9/16/1999
CAD FILE PATH 00022489
SCALE Full
DRAWING NO. 4B88E058J
SHEET 1 OF 1
PROJECT NO. FB4010