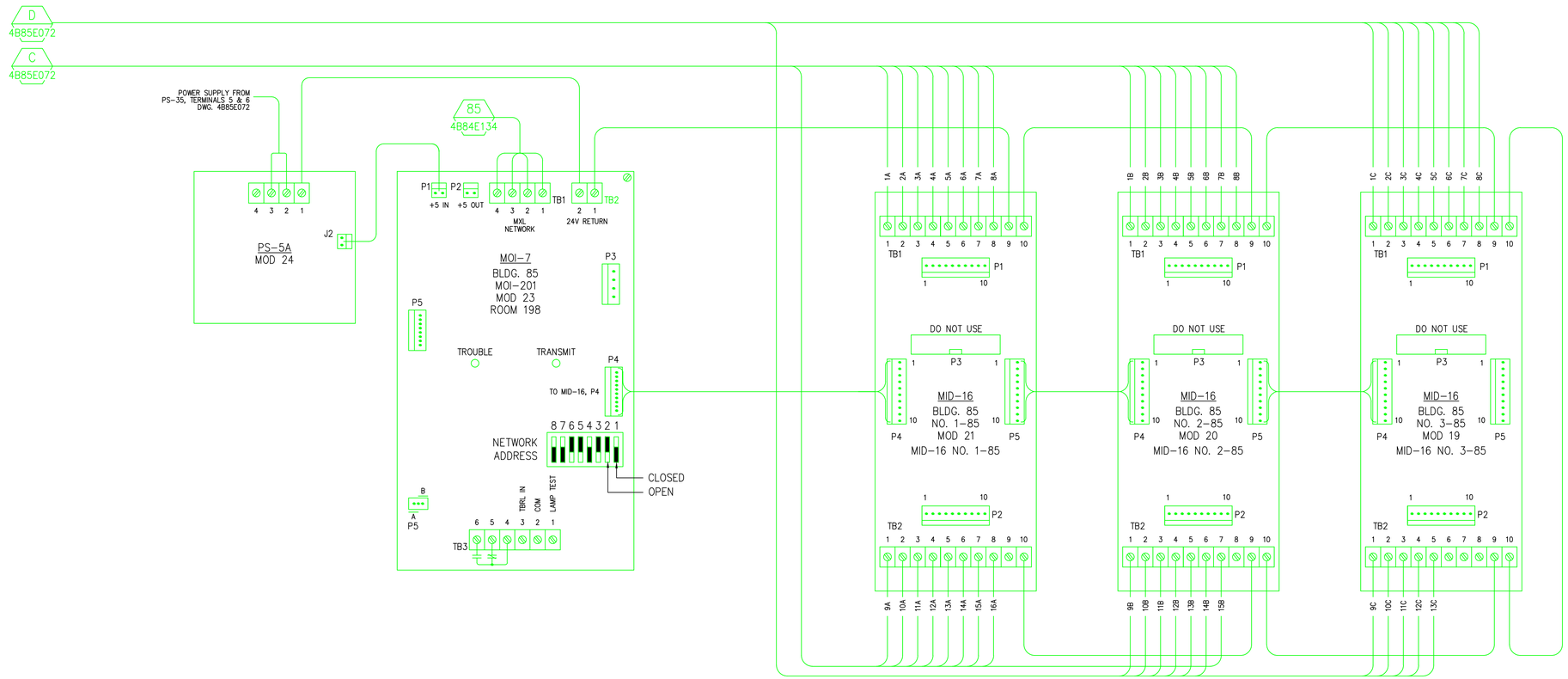

OLD ADDRESS	DESCRIPTION	MID-16 TERMINATION	MODULE TYPE & NO.	MXL NO. 6 AT B. 84 ADDRESS
2H01	MX-203 TROUBLE	N/A	N/A	N/A
2H02	HEF MANUAL STATION RELEASE	TB. 1 NO. 1	MID-16 NO. 1-85	6-201-1
2H03	HEF MANUAL STATION RELEASE	TB. 1 NO. 2	MID-16 NO. 1-85	6-201-2
2H04	HD/HEF ROOM 108	TB. 1 NO. 3	MID-16 NO. 1-85	6-201-3
2H05	HD/HEF ROOM 111	TB. 1 NO. 4	MID-16 NO. 1-85	6-201-4
2H06	HD/HEF ROOM 115	TB. 1 NO. 5	MID-16 NO. 1-85	6-201-5
2H07	HD/HEF ROOM 114	TB. 1 NO. 6	MID-16 NO. 1-85	6-201-6
2H08	HD/HEF ROOM 116	TB. 1 NO. 7	MID-16 NO. 1-85	6-201-7
2H09	HD/HEF ROOM 120	TB. 1 NO. 8	MID-16 NO. 1-85	6-201-8
2H10	HD/HEF ROOM 118	TB. 2 NO. 1	MID-16 NO. 1-85	6-201-9
2H11	HD/HEF ROOM 121	TB. 2 NO. 2	MID-16 NO. 1-85	6-201-10
2H12	HD/HEF ROOM 122	TB. 2 NO. 3	MID-16 NO. 1-85	6-201-11
2H13	HD/HEF ROOM 212	TB. 2 NO. 4	MID-16 NO. 1-85	6-201-12
2H14	HD/HEF ROOM 220	TB. 2 NO. 5	MID-16 NO. 1-85	6-201-13
2H15	HD/HEF ROOM 219	TB. 2 NO. 6	MID-16 NO. 1-85	6-201-14
2H16	HD/HEF ROOMS 217/218	TB. 2 NO. 7	MID-16 NO. 1-85	6-201-15

FORMERLY MX-316 (TR-243)

OLD ADDRESS	DESCRIPTION	MID-16 TERMINATION	MODULE TYPE & NO.	MXL NO. 6 AT B. 84 ADDRESS
2H17	MX-203 TROUBLE	N/A	N/A	N/A
2H18	HD/HEF ROOM 222	TB. 1 NO. 1	MID-16 NO. 2-85	6-201-17
2H19	HD/HEF ROOM 223	TB. 1 NO. 2	MID-16 NO. 2-85	6-201-18
2H20	HD/HEF ROOM 224	TB. 1 NO. 3	MID-16 NO. 2-85	6-201-19
2H21	SD ALL FLOORS; HD/RM 103	TB. 1 NO. 4	MID-16 NO. 2-85	6-201-20
2H22	DSD 1ST & 2ND FLOORS	TB. 1 NO. 5	MID-16 NO. 2-85	6-201-21
2H23	WFS ALL FLOORS	TB. 1 NO. 6	MID-16 NO. 2-85	6-201-22
2H24	VALVE SUPERVISION ALL FLOORS	TB. 1 NO. 7	MID-16 NO. 2-85	6-201-23
2H25	NOT USED	N/A	N/A	
2H26	B85A, HW-14 HD/AFFF DELUGE	TB. 1 NO. 8	MID-16 NO. 2-85	6-201-24
2H27	HD GLOVE BOX ROOM 114	TB. 2 NO. 1	MID-16 NO. 2-85	6-201-25
2H28	FCB UPPER YARD	TB. 2 NO. 2	MID-16 NO. 2-85	6-201-26
2H29	FCB LOWER YARD	TB. 2 NO. 3	MID-16 NO. 2-85	6-201-27
2H30	LOW FOAM LEVEL (SUPERVISION)	TB. 2 NO. 4	MID-16 NO. 2-85	6-201-28
2H31	HEF TANK (SUPERVISION)	TB. 2 NO. 5	MID-16 NO. 2-85	6-201-29
2H32	HEF TANK OVERFILL	TB. 2 NO. 6	MID-16 NO. 2-85	6-201-30

OLD ADDRESS	DESCRIPTION	MID-16 TERMINATION	MODULE TYPE & NO.	MXL NO. 6 AT B. 84 ADDRESS
2H33	MX-203 TROUBLE	N/A	N/A	N/A
2H34	NOTIFIER FAP AC PWR (SUPV)	TB. 1 NO. 1	MID-16 NO. 3-85	6-201-33
2H35	HD/WFS B85K MW-8 LOWER YD	TB. 1 NO. 2	MID-16 NO. 3-85	6-201-34
2H36	NOT USED	N/A	N/A	N/A
2H37	HD/DRY CHEM B85J HW-8	TB. 1 NO. 3	MID-16 NO. 3-85	6-201-35
2H38	HD/WFS B85H HW-9 UPPER YD	TB. 1 NO. 4	MID-16 NO. 3-85	6-201-36
2H39	HD/WFS B85G HW-10 UPPER YD	TB. 1 NO. 5	MID-16 NO. 3-85	6-201-37
2H40	HD/WFS B85F HW-11 UPPER YD	TB. 1 NO. 6	MID-16 NO. 3-85	6-201-38
2H41	WFS B85E HW-12 UPPER YARD	TB. 1 NO. 7	MID-16 NO. 3-85	6-201-39
2H42	HD/WFS B85D HW-12 UPPER YD	TB. 1 NO. 8	MID-16 NO. 3-85	6-201-40
2H43	B85A HW-14 SUPERVISION	TB. 2 NO. 1	MID-16 NO. 3-85	6-201-41
2H44	B85 RM 119 HD/DR CHEM	TB. 2 NO. 2	MID-16 NO. 3-85	6-201-42
2H45	UPPER YARD SUPERVISION	TB. 2 NO. 3	MID-16 NO. 3-85	6-201-43
2H46	LOWER YARD SUPERVISION	TB. 2 NO. 4	MID-16 NO. 3-85	6-201-44
2H47	WFS CLEAN DRUM STO UPPER YD	TB. 2 NO. 5	MID-16 NO. 3-85	6-201-45
2H48	NOT USED	N/A	N/A	N/A

FORMERLY MX-316 (TR-245)

OLD ADDRESS	DESCRIPTION	MID-16 TERMINATION	MODULE TYPE & NO.	MXL NO. 6 AT B. 84 ADDRESS
2H49	MX-203 TROUBLE	N/A	N/A	N/A
2H50	NOT USED	N/A	N/A	
2H51	NOT USED	N/A	N/A	
2H52	NOT USED	N/A	N/A	
2H53	NOT USED	N/A	N/A	
2H54	HD/HEF ROOM 106	TB. 2 NO. 8	MID-16 NO. 1-85	N/A
2H55	NOT USED	N/A	N/A	
2H56	NOT USED	N/A	N/A	
2H57	NOT USED	N/A	N/A	
2H58	NOT USED	N/A	N/A	
2H59	NOT USED	N/A	N/A	
2H60	B85 SYSTEM 3 TROUBLE ***	TB. 2 NO. 7	MID-16 NO. 2-85	HOLD
	NOT USED	N/A	N/A	
	NOT USED	N/A	N/A	
	NOT USED	N/A	N/A	
	NOT USED	N/A	N/A	

FORMERLY MX-316 (TR-246)
*** SEE 4B85BE011

AS BUILT

D
6/20/13

PROFESSIONAL SEAL
(IF REVISION, APPLIES ONLY TO REVISED WORK)

ISSUE (PROGRESS, ESTIMATE, BID, CONSTRUCTION, CONFORMED, REVISION, RECORD)

REVISION NUMBER	DRAWN BY	CHECKED BY	APPR'D BY	DATE	REMARKS
D	DSV	LDD	MCD	6/20/13	AS BUILT PER FIELD VERIFICATION
C	AD	LDD	MCD	6/06/06	REVISED FOR MXL COPPER LOOP
B	RZT	MCG	MCG	3/28/05	GEN. REV. FOR MXL SYSTEM.
A	AD	AD	MCG	10/13/2003	AS-BUILT, PHASE II FA UPGRADE

85 BLDG 85
REPLACEMENT FIRE ALARM SYSTEM
MOI/MID MODULE ARRANGEMENT

UNIVERSITY OF CALIFORNIA
LAWRENCE BERKELEY NATIONAL LABORATORY
FACILITIES DIVISION

DRAWN BY HYT	DATE 3/20/2003	
CHECKED BY HYT	3/20/2003	
APPROVED BY		
CAD FILE PATH		
SCALE As Noted		
DRAWING NO. 4B85E075D		SHEET 1 OF 1
PROJECT NO. FAB040		