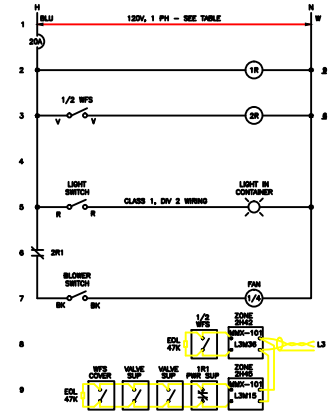

1 CHEM-STORE 85D (WAS B75L)(HW-13)

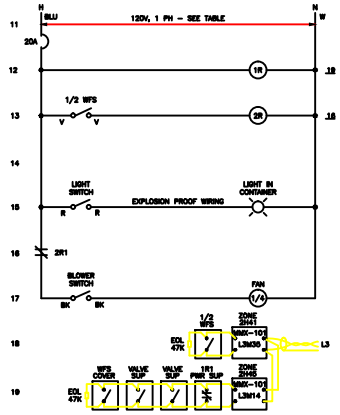

2 CHEM-STORE 85E (WAS B75M)(HW-12)

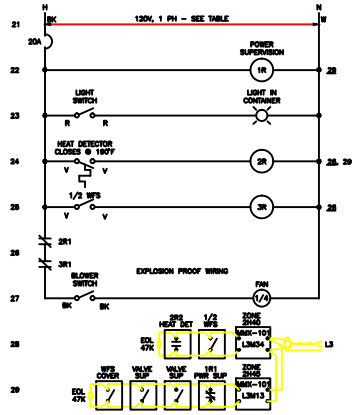

3 CHEM-STORE 85F (WAS B75A-2)(HW-11)

STORAGE CONTAINER	FED FROM CIRCUIT	MMX-101 ALM NUMBER	FIRE ALARM ZONE #	MMX-101 SUPV NUMBER	FIRE ALARM ZONE #
85D (HW-13)	E350A-11	L3M36	2H42	L3M15	2H45
85E (HW-12)	E350A-11	L3M35	2H41	L3M14	2H45
85F (HW-11)	E350A-13	L3M34	2H40	L3M13	2H45
85G (HW-10)	E350A-13	L3M33	2H39	L3M12	2H45
85H (HW-9)	E350A10	L3M32	2H38	L3M11	2H45
85H BLOWER	E350A-39&41				
85J (HW-8)	E350A-14&16	L3M30	2H37	L3M10	2H45
85K (MW-8)	E350A-12	L3M22	2H35	L3M21	2H46
85M, N, P		L3M331	2H47	L3M316	2H45

4 POWER & FIRE ALARM TABLE

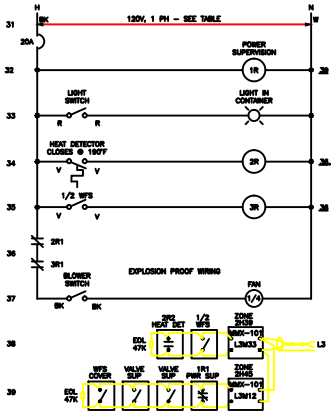

5 CHEM-STORE 85G (WAS B75A-1)(HW-10)

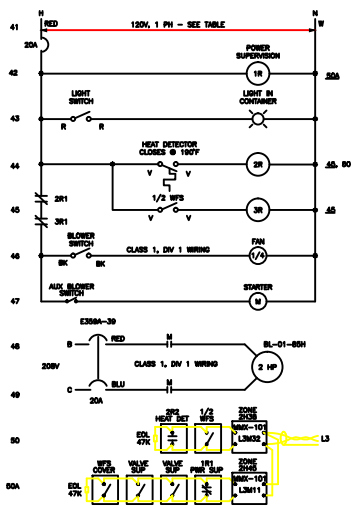

6 CHEM-STORE 85H (WAS B75H)(HW-9)

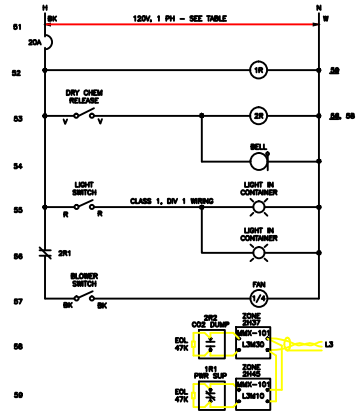

7 CHEM-STORE 85J (WAS B75N)(HW-8)

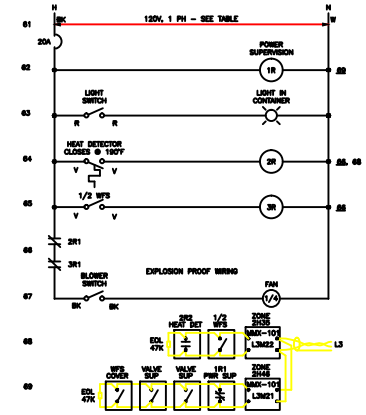

8 CHEM-STORE 85K (WAS B75A-3)(MW-8)

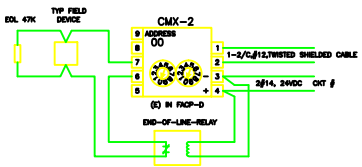

9 FIELD DEVICE (TYP)

FIELD DEVICE	YARD LOCATION	CMX-2 ADDRESS #	24VDC CKT #	END -OF LINE RELAY
BELL	UPPER & LOWER	78	11	–
STROBE	UPPER	79	12	–
STROBE	LOWER	77	10	–

10 FIELD DEVICE TABLE FOR DETAIL 10

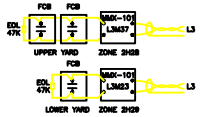

11 FIRE CALL BOX DETAIL

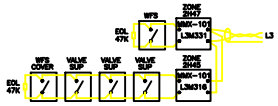

12 CLEAN DRUM STORAGE 85M, N P

NOTE: ALL RELAYS SHOWN DEENEGIZED

REVISION NUMBER	DRAWN BY	CHECKED BY	APPR'D BY	DATE	REMARKS
C	ROB	MCG	MCG	03/11/98	AS-BUILT
B	ROB	MCG	MCG	2/26/98	ADD 85M, N, P WF SWITCH
A	ROB	MCG	MCG	6/6/97	AS-BUILT

85
STORAGE CONTAINERS
POWER & FIRE ALARM DETAILS

UNIVERSITY OF CALIFORNIA LAWRENCE BERKELEY LABORATORY
FACILITIES DEPARTMENT

DRAWN BY	ROB	DATE 04/15/97
CHECKED BY	MCG	04/15/97
APPROVED BY	MCG	04/15/97
CAD FILE PATH	00010533	
SCALE	As Noted	
DRAWING NO.	4B85E008C	SHEET E3 1 OF 1
PROJECT NO.	FX9026	