SYTSEM 3 PANEL FAP-002-84

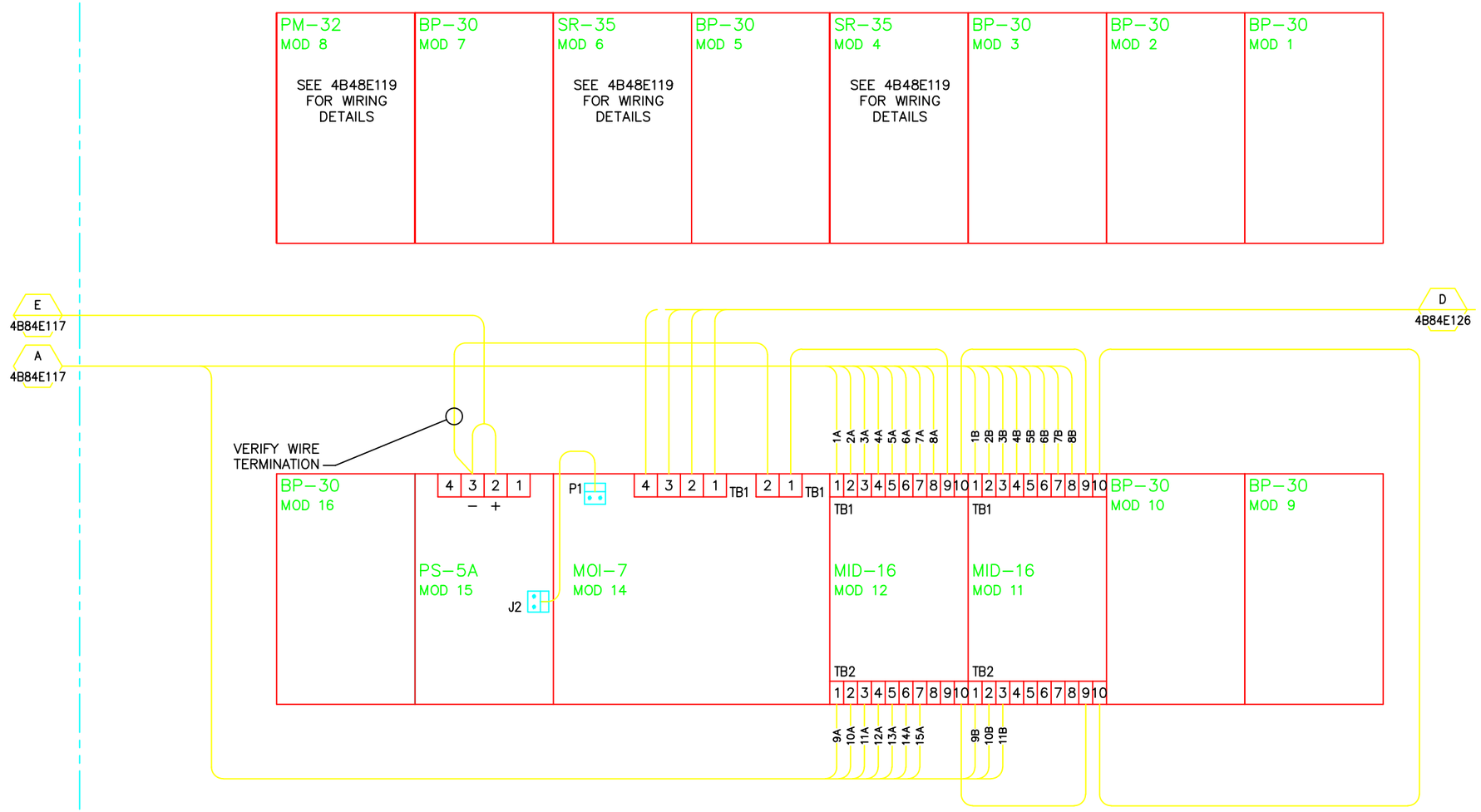

	AS BUILT						
	D 06/18/13	D	DSV	LDD	MCD	6/18/13	AS BUILT PER FIELD VERIFICATION
		C	RZT	MCG	MCG	4/15/05	GENERAL REVISION
		B	MRC	AD	MCG	8/15/03	PHASE II FIRE ALARM SYSTEM UPGRADE
		A	HYT	HYT	–	3/15/02	REPLACEMENT FIRE ALARM PROJECT REDRAWN ON AUTO CAD AS-BUILT
PROFESSIONAL SEAL (IF REVISION, APPLIES ONLY TO REVISED WORK)	ISSUE (PROGRESS, ESTIMATE, BID, CONSTRUCTION, CONFORMED, REVISION, AS-BUILT)	REVISION NUMBER	DRAWN BY	CHECKED BY	APPR'D BY	DATE	REMARKS

84 FIRE ALARM
SYS 3 PNL FAP-002-84
INTERCONNECTION DIAG

UNIVERSITY OF CALIFORNIA
LAWRENCE BERKELEY NATIONAL LABORATORY
FACILITIES DEPARTMENT

DRAWN BY	LDD	DATE 3/6/2002
CHECKED BY	MCG	3/6/2002
APPROVED BY	MCG	3/8/2002
CAD FILE PATH		
SCALE	As Noted	
DRAWING NO.	4B84E118D	SHEET
PROJECT NO.	WG0721	1 OF 1