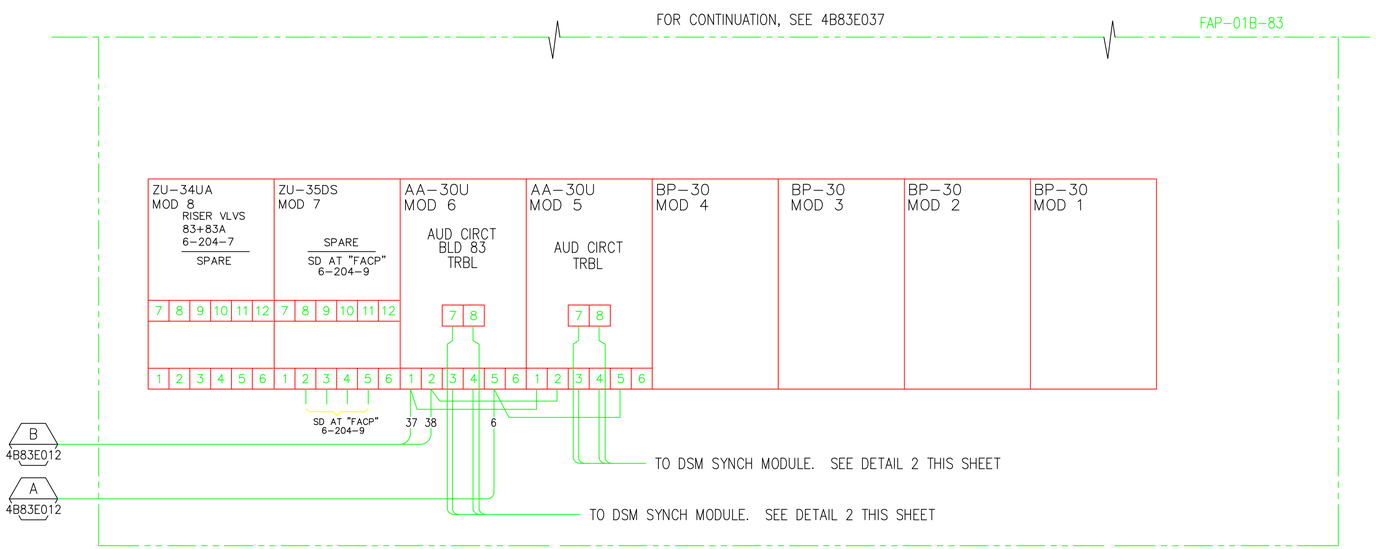

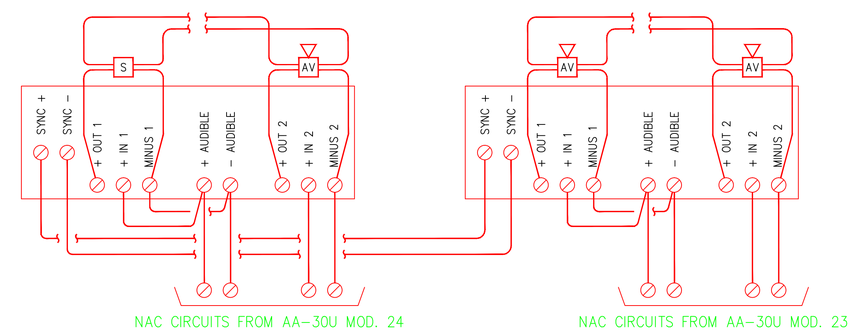

AS BUILT
C
6/18/13

ISSUE (PROGRESS, ESTIMATE, BID, CONSTRUCTION, CONFORMED, REVISION, AS-BUILT)	REVISION NUMBER	DRAWN BY	CHECKED BY	APPR'D BY	DATE	REMARKS
	E	DSV	LDD	MCD	6/18/13	AS BUILT PER FIELD VERIFICATION
	B	HYT	HYT	–	1/6/11	RECORD DRAWING
	A	HYT	HYT	–	11/8/10	BUILDING MODIFICATIONS

83 FIRE ALARM SYSTEM
FAP-01B-83
WIRING DIAGRAM

UNIVERSITY OF CALIFORNIA
LAWRENCE BERKELEY NATIONAL LABORATORY
FACILITIES DIVISION

DRAWN BY DWH	DATE 8/15/08	
CHECKED BY BBT	8/15/08	
APPROVED BY		
CAD FILE PATH		
SCALE As Noted		
DRAWING NO. 4B83E042C	SHEET	
PROJECT NO. WCV632	OF	