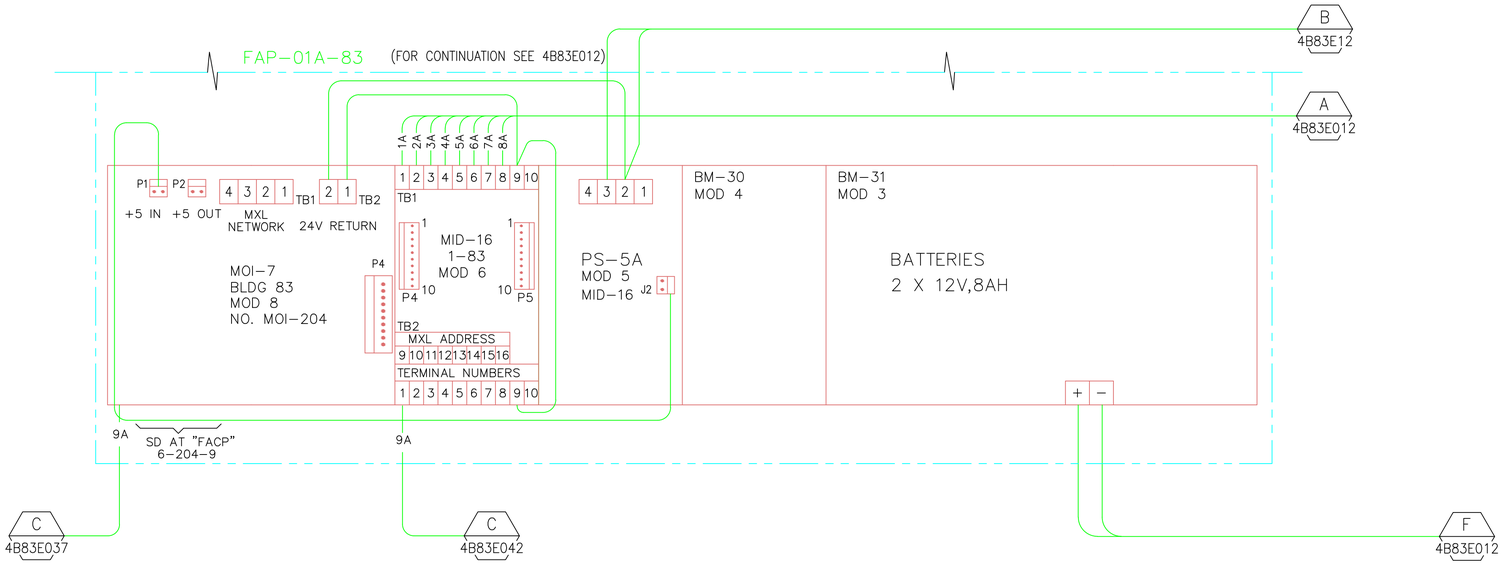

	AS BUILT						
	E	E	DSV	LDD	MCD	6/18/13	AS BUILT PER FIELD VERIFICATION
	6/18/13	D	AD	–	–	10/29/07	ISSUED FOR REFERENCE ONLY
		C	AD	LDD	MCD	10/10/07	FIRE ALARM SYSTEM UPGRADE
		B	RZT	MCG	MCG	4/01/05	REVISED FOR DIGITIZE SYSTEM.
		A	AD	MCG	MCG	10/23/03	AS-BUILT, PHASE II FA UPGRADE
PROFESSIONAL SEAL (IF REVISION, APPLIES ONLY TO REVISED WORK)	ISSUE (PROGRESS, ESTIMATE, BID, CONSTRUCTION, CONFORMED, REVISION, RECORD)	REVISION NUMBER	DRAWN BY	CHECKED BY	APPR'D BY	DATE	REMARKS

83 FIRE ALARM SYSTEM

FAP-01A-83

INTERCONNECTION DIAGRAM

UNIVERSITY OF CALIFORNIA
LAWRENCE BERKELEY NATIONAL LABORATORY
FACILITIES DIVISION

DRAWN BY	HYT	DATE 2/12/2002
CHECKED BY	HYT	2/12/2002
APPROVED BY		
CAD FILE PATH		
SCALE	As Noted	
DRAWING NO.	4B83E037E	SHEET
PROJECT NO.	FA8040	1 OF 1