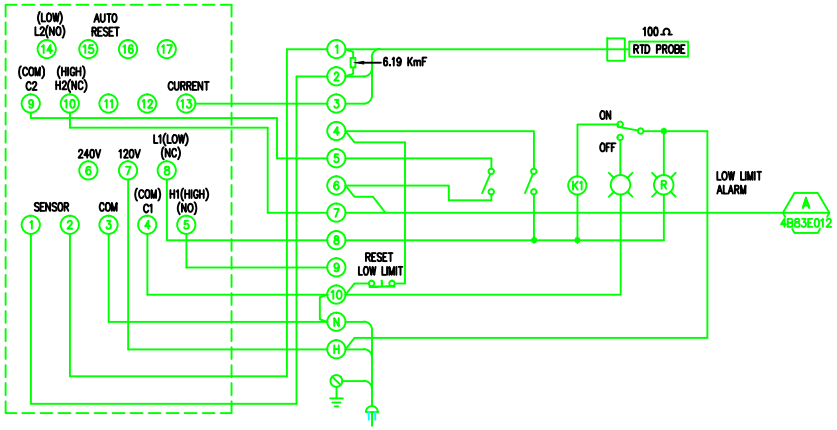

LOVE INCUBATOR ALARM

MODEL 64 AND 65

SYMBOLS:

- FIRE CALL BOX
- DUCT DETECTOR
- TEMP. SUPV. SW.
- PRESSURE SUPV. SW.
- VALVE SUPV. SW.
- WFS W/SUPV. SW.
- HEAT DETECTOR

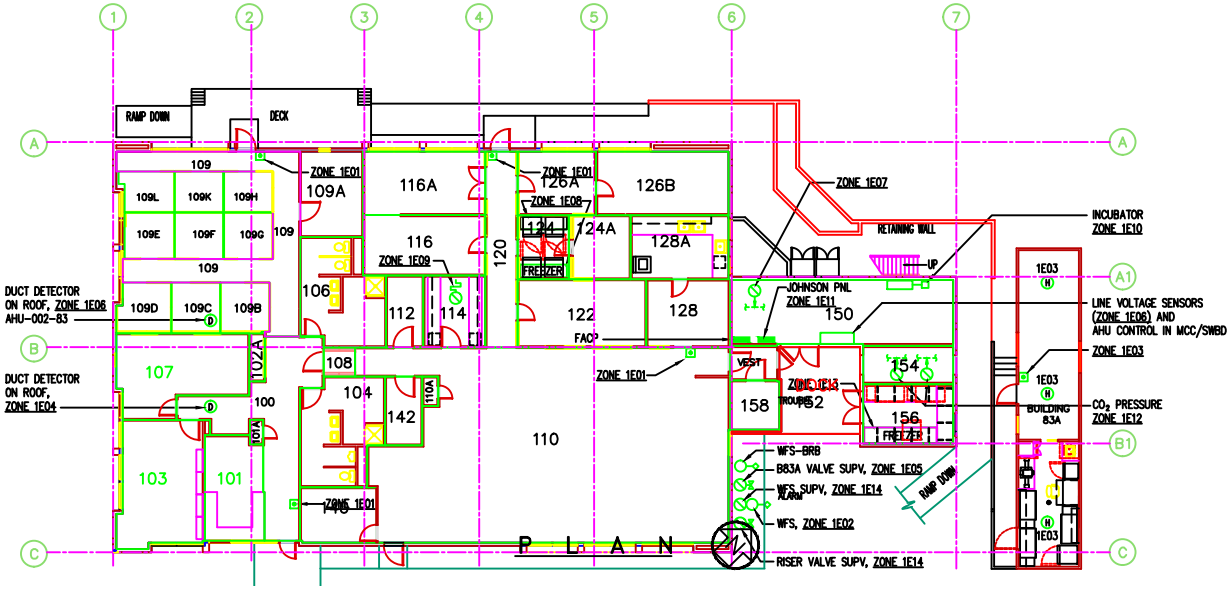

REVISION NUMBER	DRAWN BY	CHECKED BY	APPR'D BY	DATE	REMARKS
B	LM	ROB	MCG	7/1/99	AUTOCAD CONVERSION – AS BUILT
A	TB			8/4/94	ADD DD AHU-002-83

83 AND 83A BLDGS
FIRE ALARM SYSTEM
PLAN AND SCHEMATIC

UNIVERSITY OF CALIFORNIA LAWRENCE BERKELEY LABORATORY
FACILITIES DEPARTMENT

DRAWN BY	LSR	1/9/1986
CHECKED BY	RG	1/9/1986
APPROVED BY	BHS	1/10/1986
CAD FILE PATH	00006899	
SCALE	As Noted	
DRAWING NO.	4B83E014B	SHEET 1 OF1
PROJECT NO.	153794	