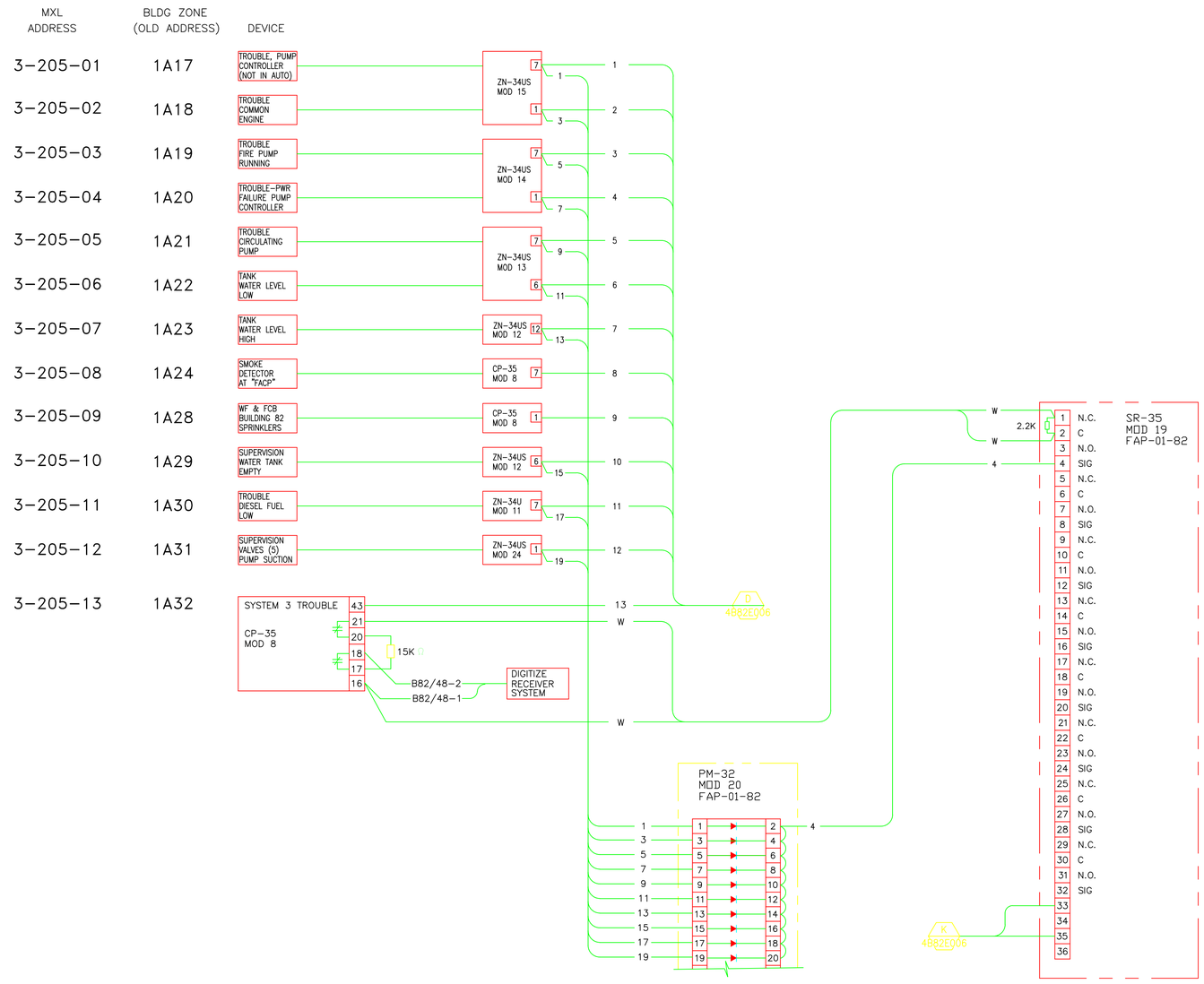

PROFESSIONAL SEAL (IF REVISION, APPLIES ONLY TO REVISED WORK)	ISSUE (PROGRESS, ESTIMATE, BID, CONSTRUCTION, CONFORMED, REVISION, RECORD)	REVISION NUMBER	DRAWN BY	CHECKED BY	APPR'D BY	DATE	REMARKS
	ASBUILT REVISION B 11/29/2007	B	AD	LDD	MCD	11/29/07	AS-BUILT RECORD DRAWING
		A	AD	LDD	MCD	10/08/07	FIRE ALARM SYSTEM UPGRADE

82
FIRE ALARM SYSTEM
LOGIC DIAGRAM

UNIVERSITY OF CALIFORNIA
LAWRENCE BERKELEY NATIONAL LABORATORY
FACILITIES DIVISION

DRAWN BY	AD	DATE 6/1/2005
CHECKED BY	MCG	6/1/2005
APPROVED BY	MCG	6/1/2005
CAD FILE PATH	00022795	
SCALE	Full	
DRAWING NO.	4B82E005B	SHEET 1 OF 1
PROJECT NO.	WN1787	