MOUNTING DETAILS

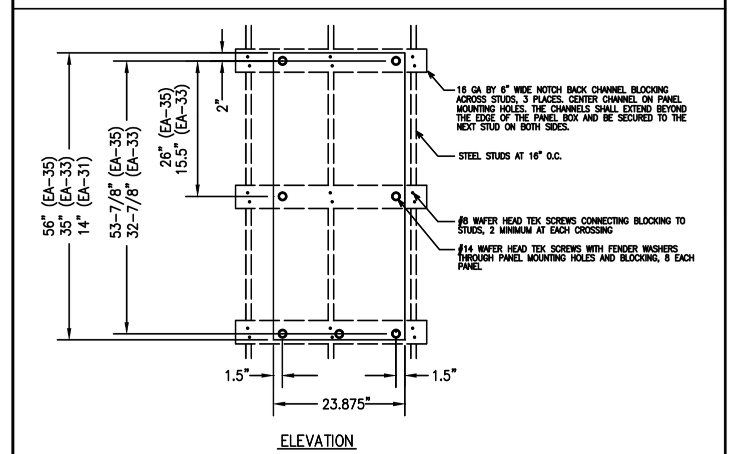

ELEVATION

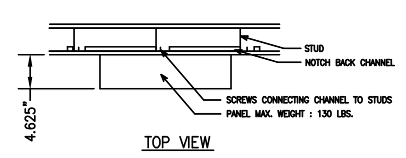

TOP VIEW

TYPICAL MOUNTING DETAIL OF SYSTEM-3 ENCLOSURE

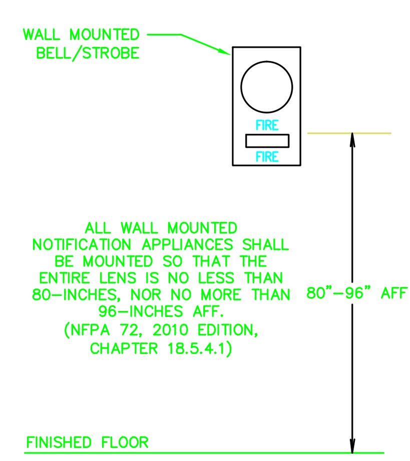

TYPICAL PANEL MOUNTING DETAIL

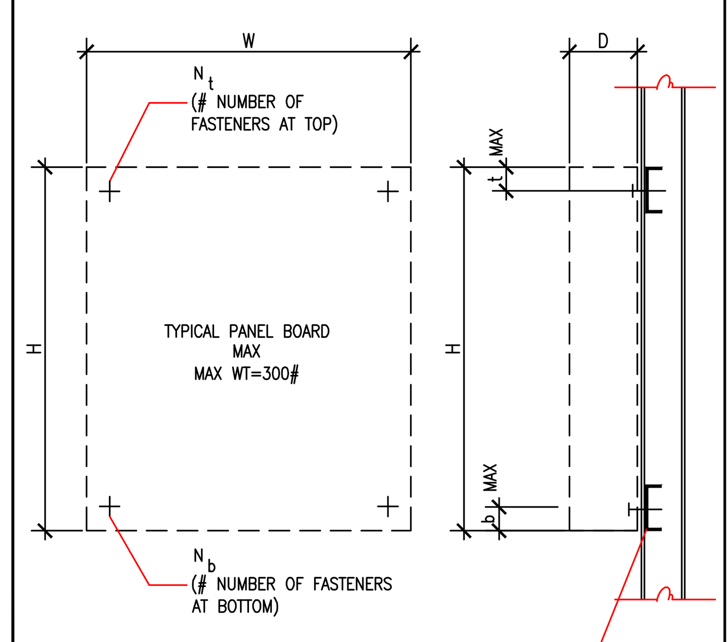

TYPICAL FASTENERS:
AT METAL BACKING USE #14 HHSMS W/ WASHERS
AT CONCRETE WALL USE ¼" DIA. "POWERS" WEDGE BOLT W/ 2" EMBED(ICBOER-5788)

1 TYP MTG OF EQUIP. WEIGHING OVER 20 LBS.
(300 LBS MAXIMUM)

THROUGH-PENETRATION FIRESTOP SYSTEM DETAILS

SYSTEM NO. CAJ1044

T RATING – 0 HR
L RATING AT AMBIENT – 2 CFM/SQ FT (SEE ITEM 4)
L RATING AT 400 F – LESS THAN 1 CFM/SQ FT (SEE ITEM 4)

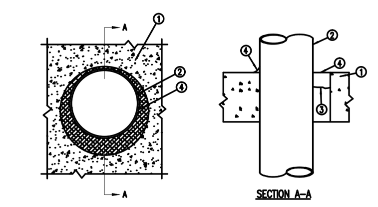

1. FLOOR WALL ASSEMBLY–LIGHTWEIGHT OR NORMAL WEIGHT (100–150 PCF) CONCRETE. EXCEPT AS NOTED IN TABLE UNDER ITEM 4, MIN THICKNESS OF SOLID CONCRETE FLOOR OR WALL ASSEMBLY IS 4-1/2 IN. FLOOR MAY ALSO BE CONSTRUCTED OF ANY MIN 6 IN. THICK UL CLASSIFIED HOLLOW-CORE. PRECOAT CONCRETE UNITS. WHEN FLOOR IS CONSTRUCTED OF HOLLOW-CORE PRECOAT CONCETE UNITS, PACKING MATERIALS (ITEM 3) AND CAULK FILL MATERIAL (ITEM 4) TO BE INSTALLED SYMETRICALLY ON BOTH SIDES OF THE FLOOR, FLUSH WITH FLOOR SURFACE. WALL ASSEMBLY MAY ALSO BE CONSTRUCTED OF CLASSIFIED CONCRETE BLOCKS. MAX DIA. OF OPENING IS 32 IN.
SEE CONCRETE BLOCKS (CAZT) AND PRECAST CONCRETE UNITS (CFTV) CATEGORY IN THE FIRE RESISTANCE DIRECTORY FOR NAMES OF MANUFACTURER

1A. STEEL SLEVE – (OPTIONAL NOT SHOWN) NOM 16 IN. (OR SMALLER) SCHEDULE 10 (ORHEAVIER) STEEL SLEEVE CAST OR GROUTED INTO FLOOR OR WALL ASSEMBLY. SLEEVE MAY EXTEND A MAX OF 2 IN. ABOVE TOP FLOOR OR BEYOND EITHER SURFACE OF WALL.

2. PIPE OR CONDUIT – NOM 30 IN.DIA. (OR SMALLER) CAST IRON OR SCHEDULE 10 (OR HEAVIER) STEEL PIPE, NOM 6 IN. DIA. (OR SMALLER) STEEL CONDUIT, NOM 3 IN. DIA. (OR SMALLER) TYPE L (OR HEAVIER) COPPER TUBE OR NOM 4 IN. DIA. (OR SMALLER) STEEL ELECTRICAL METALIC TUBING. MAX ANNULAR SPACE BETWEEN PIPE OR CONDUIT AND EDGE OF THROUGH OPENING NOT TO EXCEED 2 IN. MIN ANNULAR SPACE BETWEEN PIPE OR CONDUIT AND EDGE OF THROUGH OPENING IS 0 IN. (POINT CONTACT). PIPE OR CONDUIT TO BE RIGIDLY SUPPORTED ON BOTH SIDE OF FLOOR OR WALL ASSEMBLY.

3. PACKING MATERIAL – POLYETHYLENE BACKER ROD OR NOM 1 IN. THICKNESS OF THIGHTLY-PACKRD MINERAL WOOL BATT OR GLASS FIBER INSULATION FIRMLY PACKED INTO OPENING AS A PERMANENT FORM. PACKING MATERIAL TO BE RECESSED FROM TOP SURFACE OF FLOOR OF FROM BOTH SURFACES OF WALL AS REQUIRED TO ACCOMODATE THE REQUIRED THICKNESS OF CAULK FILL MATERIAL (ITEM 4).

4. FILL, VOID OR CAVITY MATERIAL – CAULK – APPLIED TO FILL THE ANNULAR SPACE FLUSH WITH TOP SURFACE OF FLOOR. IN WALL ASSEMBLIES, REQUIRED CAULK THICKNESS TO BE INSTALLED SYMMETRICALLY ON BOTH SIDES OF WALL, FLUSH WITH WALL SURFACE. THE HOURLY F RATING AND THE MIN REQUIRED CAULK THICKNESS ARE DEPENDENT UPON A NUMBER OF PARAMETERS, AS SHOWN ON THE FOLLOWING TABLE.

MIN FLOOR OR WALL THKNS, IN	NOM PIPE TUBE OR CONDUIT DIA. IN.	MAX ANNULAR SPACE, IN	MAX CAULK THKNS, IN	F RATING, HR
2-1/2	1/2-12	1-3/8	1/2	2
2-1/2	1/2-12	2-7/8	1	2
4-1/2	1/2-6	1-3/8	1/4(a)	2
4-1/2	1/2-12	1-1/4	1/2	3
4-1/2	1/2-20	2	1	3
4-1/2	22-30	2	2	3
5-1/2	1/2-6	1-3/8	1(b)	4

(a) MIN 2 IN THICKNESS OF MINERAL-WOOL BATT INSULATION REQUIRED IN ANNULAR SPACE.
(b) MIN 1 IN. THICKNESS OF MINERAL-WOOL BATT INSULATION REQUIRED IN ANNULAR SPACE ON BOTH SIDES OF FLOOR OR WALL ASSEMBLY. MIN 1IN. THICKNESS OF CAULK TO BE INSTALLED FLUSH WITH EACH SURFACE FLOOR OR WALL ASSEMBLY.

MINNESOTA MINING & MANUKACTURING CO – TYPES CP-25 WB, CP-25 WB+.
(NOTE: L RATING AND OR USE OF OPTIONAL SLEEVE APPLY ONLY WHEN TYPE CP-25WB+ CAULK IS USED).

SYSTEM NO. CAJ1027

F RATING – 3 HOUR
T RATING – 0 HOUR

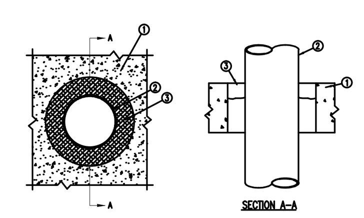

1. FLOOR OR WALL ASSEMBLY – MIN 4-1/2 IN. THICK LIGHTWEIGHT OR NORMAL WEIGHT CONCRETE. WALL MAY ALSO BE CONSTRUCTED OF ANY UL CLASSIFIED CONCRETE BLOCKS. MAX THROUGH OPENING SIZE IS 12.4 SQ. IN.

SEE CONCRETE BLOCKS (CAZT) CATEGORY IN FIRE RESISTANCE DIRECTORY FOR NAMES OF MANUFACTURERS.

2. PIPE OR CONDUIT – NOM. 10 IN. DIA. (OR SMALLER) SCHEDULE 10 (OR HEAVIER) STEEL PIPE, NOM 6 IN. DIA. (OR SMALLER) RIGID STEEL CONDUIT, NOM 4 IN. DIA. (OR SMALLER) STEEL EMT OR NOM 3 IN. DIA. (OR SMALLER). TYPE L (OR HEAVIER) COPPER PIPE. MAX ONE PIPE OR CONDUIT PER THROUGH OPENING. MAX ANNULAR SPACE BETWEEN PIPE OR CONDUIT AND EDGE OF OPENING IS 3/4 IN. MIN ANULAR SPACE BETWEEN PIPE OR CONDUIT AND EDGE OF OPENING IS 0 IN. (POINT CONTACT). PIPE OR CONDUIT TO BE RIGIDLY SUPPORTED ON BOTH SIDES OF FLOOR OR WALL ASSEMBLY.

3. FILL VOID OR CAVITY MATERIALS – PUTTY-MOLDABLE PUTTY MATERIAL KNEEDED BY HAND AND APPLIED TO FILL ANNULAR SPACE TO A MIN DEPTH OF 1 IN FLUSH WITH TOP SURFACE OF FLOOR. IN WALL ASSEMBLIES, REQUIRED PUTTIY THICKNESS TO BE INSTALLED SYMMETRICALLY ON BOTH SIDES OF WALL.

MINNESOTA MINING & MFG. CO.– MPS-2+.
*BEARING THEUL CLASSIFICATION MARKING.

SYSTEM NO. WL1001

F RATING – 1 & 2 HOUR
T RATING – 0, 1, 1-1/2 & 2 HOUR

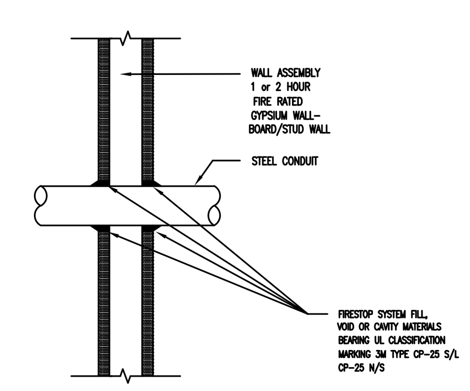

1. SEAL ALL PENETRATIONS IN ACCORDANCE WITH APPLICABLE CODES TO PRESERVE ORIGINAL FIRE HOUR RESISTANCE OF WALLS, FLOORS OR CEILINGS. USE UL DIRECTOY ASSEMBLY NOS. 49 & 328, AS APPLICABLE FOR ALL FIRE WALL PENETRATIONS.

2. AT FIRE SEPARATION WALLS, WRAP CONDUIT WITH 3M CONDUIT WRAP FJ-195 TO WITHIN 1/4" OF OPENING; FILL THE GAP AND COVER EDGE OF WRAP WITH 3M-CP25 CAULK AND/OR #303 PUTTY.

DEVICE DESIGNATION LEGEND

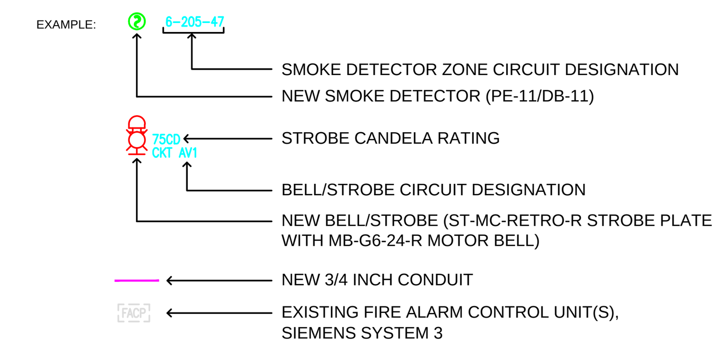

SEQUENCE OF OPERATIONS

SYSTEM EVENT / RESPONSE	ANNUNCIATE EVENT AT FACP	OPERATE NOTIFICATION APPLIANCES	FIRE SIGNAL TO LBNL RECEIVER	SUPERVISORY SIGNAL TO LBNL RECEIVER	TROUBLE SIGNAL TO LBNL RECEIVER	SHUT DOWN 77-AHU-037*	SHUT DOWN 77-MAU-038*
UNDULATOR SMOKE DETECTORS ALARM	●	●	●			●	●
AHU DUCT SMOKE DETECTOR ALARM	●	●	●			●	●
SYSTEM FAULT	●				●		

*UPON UNDULATOR SMOKE DETECTORS AND AHU DUCT SMOKE DETECTOR ALARM, FIRE ALARM RELAY CIRCUIT WILL SEND A SIGNAL TO DIGITAL CONTROLS TO SHUTDOWN 77-AHU-037.

NOTE: THIS FUNCTION CHART IDENTIFIES ONLY THOSE ACTIONS ASSOCIATED WITH THIS PROJECT AND THE NEW FIRE ALARM INITIATING DEVICES. THE NECESSARY AND REQUIRED FUNCTIONS FOR OTHER ALARM INITIATING DEVICES WITHIN THE BUILDING ARE NOT SHOWN.

ONE LINE DIAGRAM

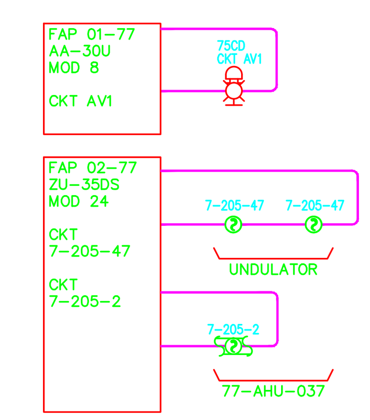

VOLTAGE DROP CALCULATIONS

NOTIFICATION APPLIANCE CIRCUIT POWER REQUIREMENTS

DESCRIPTION	CURRENT PER APPLIANCE	# OF APPLIANCES CIRCUIT AV1
SIEMENS ST-MC-RETRO SERIES STROBE 15 cd	0.064	0
SIEMENS ST-MC-RETRO SERIES STROBE 30 cd	0.098	0
SIEMENS ST-MC-RETRO SERIES STROBE 75 cd	0.175	1
SIEMENS ST-MC-RETRO SERIES STROBE 110 cd	0.233	0
SIEMENS 6" SERIES MBDC-6 MOTOR BELL	0.040	1
	TOTAL CIRCUIT CURRENT	0.215

THE FOLLOWING NOTIFICATION APPLIANCES AND THEIR POWER DEMANDS WERE USED IN THE DESIGN:

1. SIEMENS ST-MC-RETRO SERIES STROBES; 15CD (0.064 AMP), 30CD (0.098 AMP), 75CD (0.175 AMP) & 110CD (0.233 AMP) WALL MOUNTED STROBE; OPERATING VOLTAGE 16 TO 33.
2. SIEMENS 6" MBDC-6 SERIES MOTOR BELL; (0.040 AMP).

VOLTAGE DROP CALCULATIONS

{(I) (D) (21.6)}/CM
WHERE: I = CIRCUIT POWER LOAD 21.6 = CONSTANT
D = CONDUCTOR ONE WAY DISTANCE CM = CROSS SECTION AREA OF WIRE (4110 FOR AWG#14)

NAC AV1
{0.215 AMP) (300 FT) (21.64)}/4110 VOLTAGE DROP: 0.340 VOLTS AVAILABLE VOLTAGE: 23.66 VOLTS

THE CIRCUIT'S AVAILABLE VOLTAGE IS ABOVE THE MINIMUM LISTED VOLTAGE FOR THE APPLIANCES.

CONDUCTOR IDENTIFICATION LEGEND

CKT AV1	1 PAIR #14 NOTIFICATION APPLIANCE CIRCUIT CONDUCTORS (CKT AV1)
CKT 7-205-16	1 ALARM INITIATING CIRCUIT CONDUCTORS (CKT 7-205-16)
CKT REL	1 PAIR #16 RELAY CIRCUIT CONDUCTORS FOR 77-AHU-037 & 77-MAU-038 FAN SHUT DOWN

TYPICAL WIRING OF FIELD DEVICES

WARNING: THE STROBE APPLIANCES MUST BE FIELD SET TO THE DESIRED CANDELA RATING BEFORE THEY ARE INSTALLED. REFER TO FIRE ALARM FLOOR PLAN FOR APPROPRIATE CANDELA SETTING.

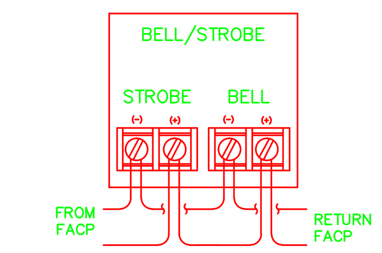

NOTE:
SYNC. MODULE NOT REQUIRED AS ONLY ONE STROBE IS BEING PROVIDED FOR THE SPACE.

ST-MC-RETRO-R w/ MBDC-6 MOTOR BELL
(Multi-Candela Appliance 15 / 30 / 75 / 110cd)

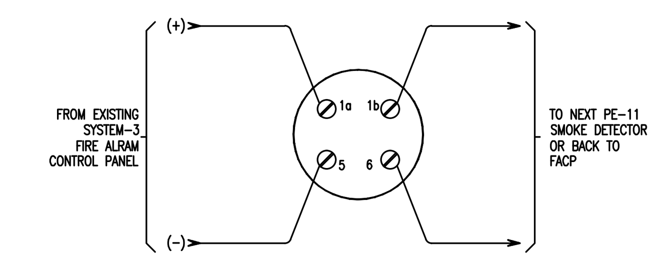

PE-11 CONVENTIONAL PHOTOELECTRIC SMOKE DETECTOR
with DB-11 DETECTOR BASE

NOTE: THE AIR FLOW INSIDE THE DUCT MUST BE MORE THAN 100 FEET PER MINUTE FOR THE DUCT DETECTOR TO OPERATE PROPERLY.

MODELAD2-P

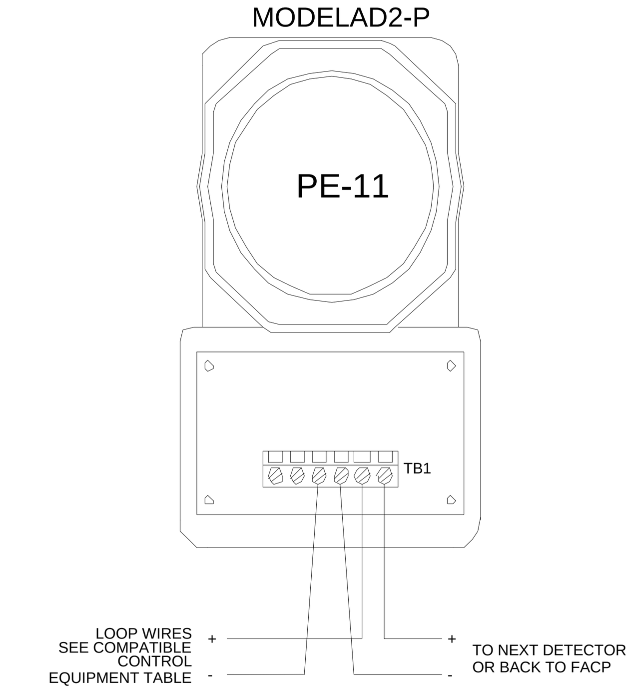

AD2-P Using PE-11 Detectors

TUBE SUPPORT ONLY FOR DUCTS GREATER THAN 3 FEET

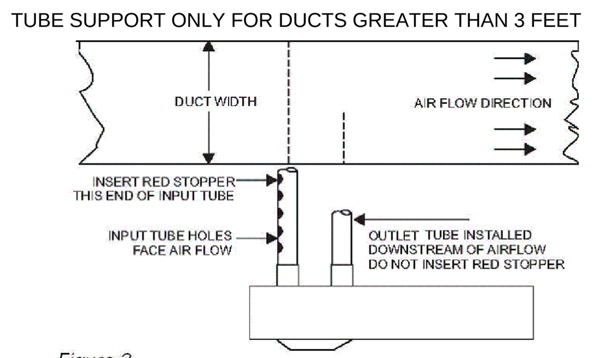

Figure 3

SAMPLING TUBE ORIENTATION

NOTE: MOUNTING SHOWN ARE TYPICAL. DETECTORS CAN BE INSTALLED SIDE, BOTTOM OR TOP OF DUCT AS LONG AS PROPER TUBE OPERATION AND FLOW/PRESSURE PERFORMANCE IS MAINTAINED

AS-BUILT – RECORD SET 02/04/2013

REVISION NUMBER	DRAWN BY	CHECKED BY	APPR'D BY	DATE	REMARKS
	JPM	KW	–	02/04/13	AS-BUILT
	JPM	KW	–	07/05/12	ISSUE FOR REVIEW

PROFESSIONAL SEAL (IF REVISION, APPLIES ONLY TO REVISED WORK)
ISSUE (PROGRESS, ESTIMATE, BID, CONSTRUCTION, CONFORMED, REVISION, RECORD)

77
UNDULATOR MEASUREMENT FACILITY
MISCELLANEOUS NOTES & DETAILS

UNIVERSITY OF CALIFORNIA
LAWRENCE BERKELEY NATIONAL LABORATORY
FACILITIES DIVISION

DRAWN BY	JPM	DATE 07/03/2012
CHECKED BY	KW	02/04/2013
APPROVED BY	KW	02/04/2013
SCALE	N/A	
DRAWING NO.	4B77E249	SHEET FA-02
PROJECT NO.	FP1110	2 OF 6