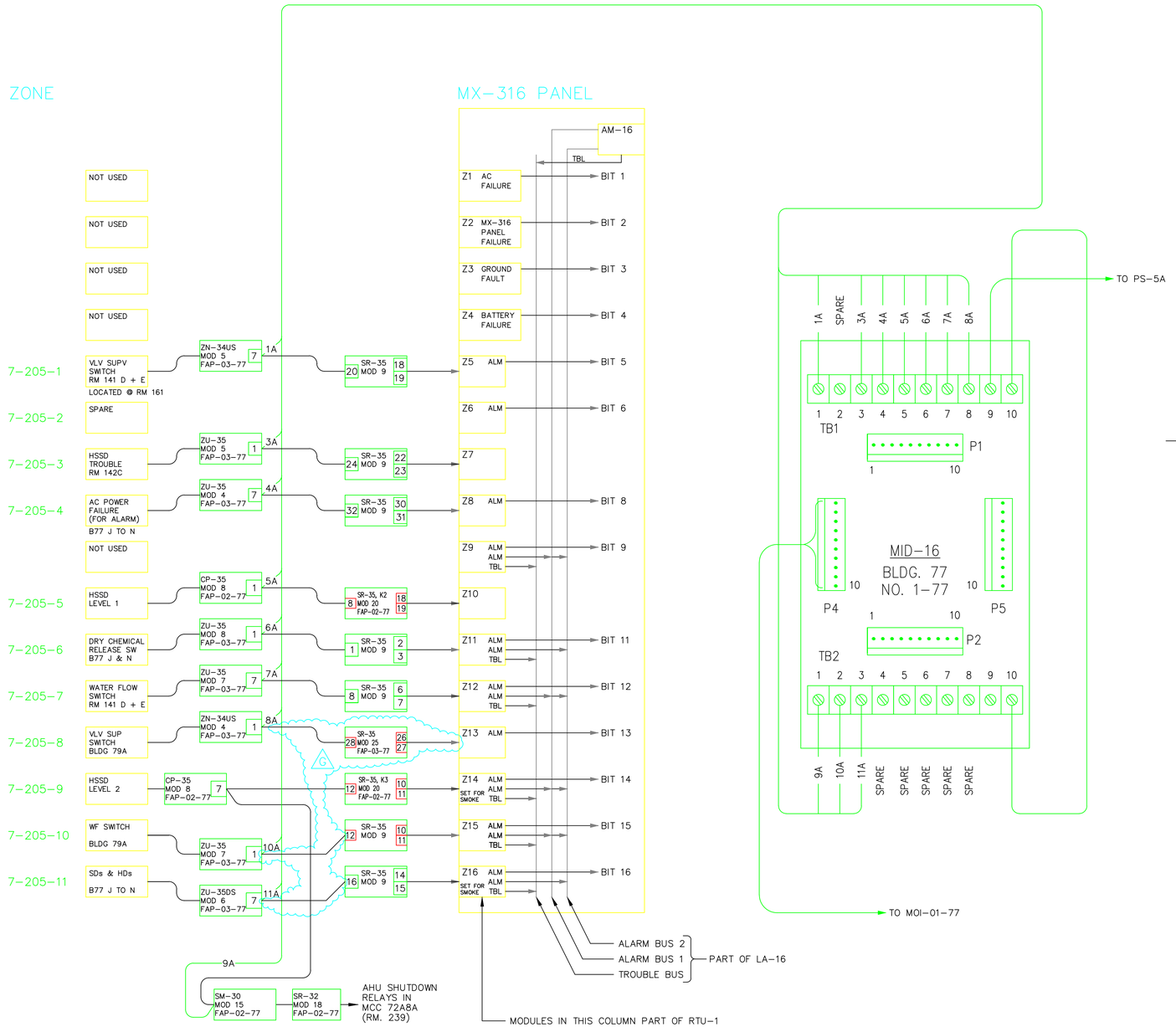

TR-122

SET S1: 00010100

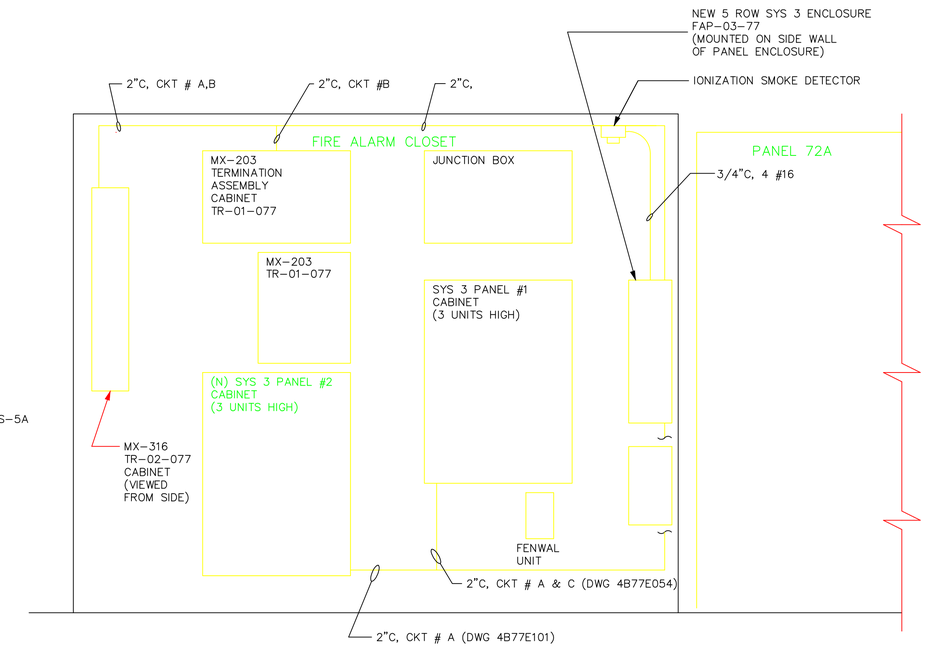

PANEL LOCATION ELEVATION

NO SCALE

(FA CLOSET SIZE: 8FT L X 4FT D X 9FT H – APPROXIMATE)

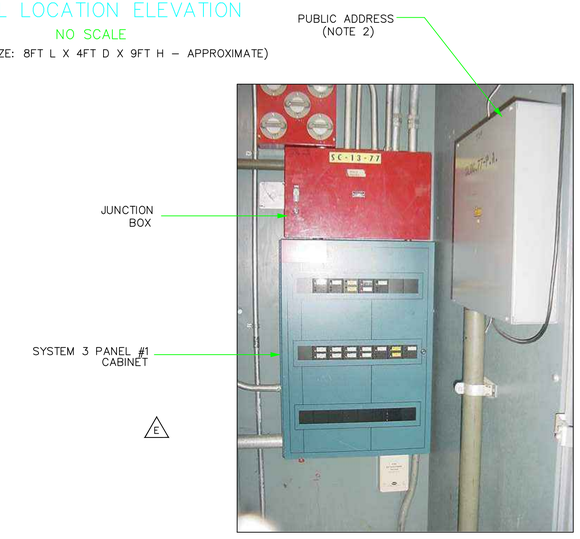

DEMOLITION ELEVATION

SCALE: NONE

REFERENCE DWGS:

4B77E046	PLAN
4B77E047	LOGIC – TR 148
4B77E053	RMS 141D & E, CHEM STORAGE MX-316 & SYS 3 PNL #1 INTERCONNECTION DIAG.
4B77E054	MX-203 & SYS 3 PNL #1 INTERCONNECTION DIAG.
4B77E065	DEVICE WIRING – RMS 141D & E, CHEM STORAGE
4B77E066	SCHEM. DIAG. – RMS 141D & E, CHEM STORAGE
4B77E100	SYS 3 PNL #2 INTERCONNECTION DIAG.

AS BUILT

H

6/13/13

REVISION NUMBER	DRAWN BY	CHECKED BY	APPR'D BY	DATE	REMARKS
H	DSV	LDD	MCD	6/13/13	AS BUILT PER FIELD VERIFICATION
G	RZT	MCG	MCG	4/27/05	REVISED FOR DIGITIZE SYSTEM
F	AD	AD	MCG	1/12/04	AS-BUILT, PHASE II FIRE ALARM UPGRADE
E	MRC	MCG	MCG	7/29/03	PHASE II FIRE ALARM UPGRADE
D	HYT	HYT	–	4/4/02	REPLACEMENT FIRE ALARM PROJECT
C	LDD	LDD	MCG	12/6/99	77 REHAB MODS – PROJ FN9100
B	LSR	ROB	ROB	2-2-94	AS-BUILT

PROFESSIONAL SEAL (IF REVISION, APPLIES ONLY TO REVISED WORK)

ISSUE (PROGRESS, ESTIMATE, BID, CONSTRUCTION, CONFORMED, REVISION, RECORD)

77 FIRE ALARM

RMS 141D & E, CHEM-STOR

LOGIC DIAGRAM FOR TR122

UNIVERSITY OF CALIFORNIA
LAWRENCE BERKELEY NATIONAL LABORATORY
FACILITIES DIVISION

DRAWN BY	LDD	DATE 12/6/1999
CHECKED BY	LDD	12/6/1999
APPROVED BY	MCG	12/6/1999
CAD FILE PATH		
SCALE	As Noted	
DRAWING NO.	4B77E052H	SHEET 1 OF 1
PROJECT NO.	FA8040	