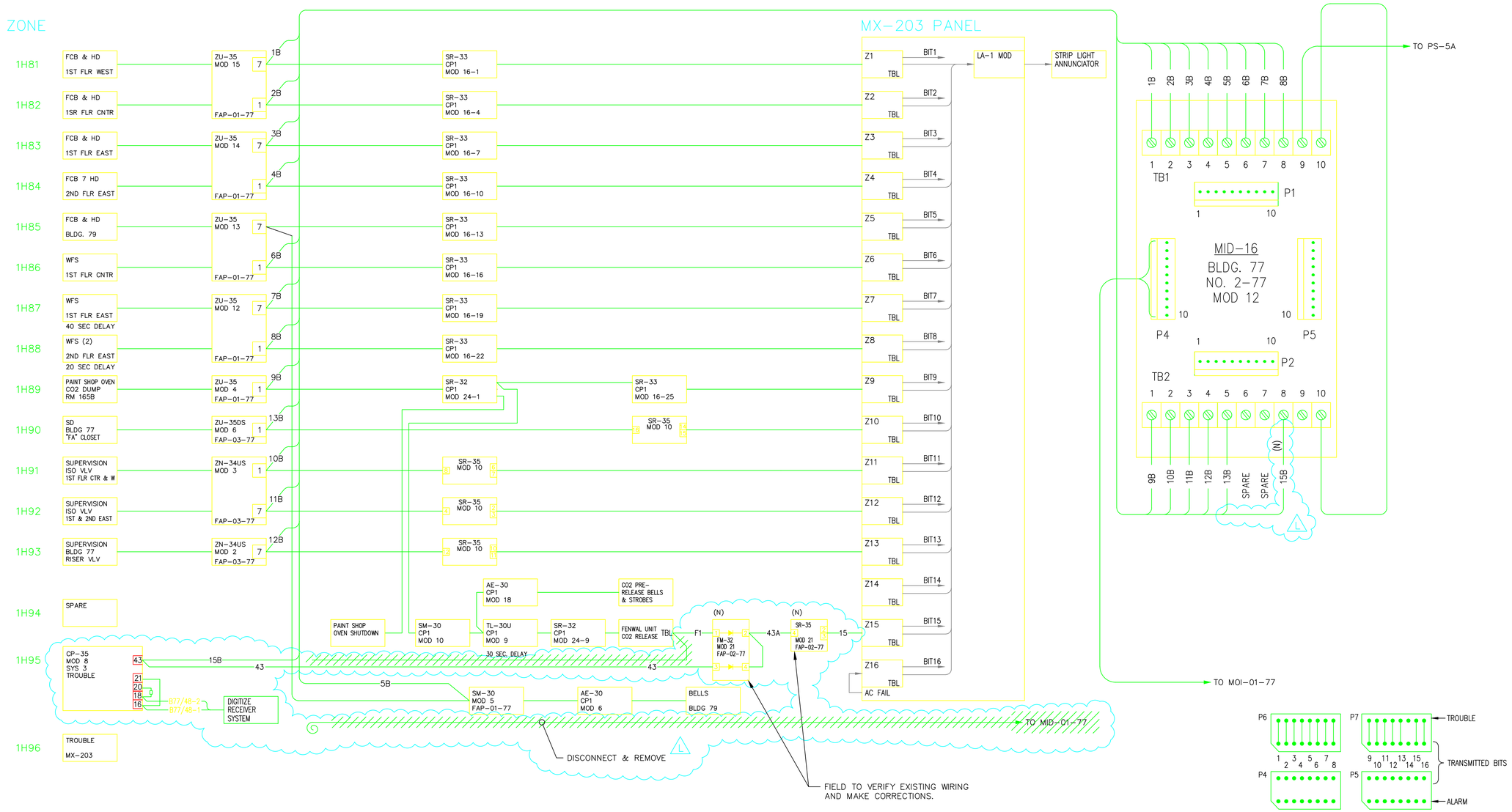

SWITCH S1 SETTING

00101111 (TR 148) LOOP 1

DETECTOR PROGRAMMING

REFERENCE DWGS:

4B77E052	LOGIC – TR 122 – RMS 141D & E, CHEM STORAGE
4B77E053	RMS 141D & E, CHEM STORAGE MX-316 & SYS 3 PNL #1 INTERCONNECTION DIAG.
4B77E054	MX-203 & SYS 3 PNL #1 INTERCONNECTION DIAG.
4B77E065	DEVICE WIRING – RMS 141D & E, CHEM STORAGE
4B77E066	SCHEM. DIAG. – RMS 141D & E, CHEM STORAGE
4B77E101	SYS 3 PNL #2 INTERCONNECTION DIAG.

DISTRIBUTION LIST:

2–ELECTRIC SHOP B76 (FILE I & II)
1–B90J (FILE III)
1–STICK FILE B90J
ORIGINAL–FLAT FILE B90F

TITLE 2
CONSTRUCTION
L
4/26/2005

REVISION NUMBER	DRAWN BY	CHECKED BY	APPR'D BY	DATE	REMARKS
L	RZT	MCG	MCG	4/26/05	REVISED FOR DIGITIZE SYSTEM
K	AD	AD	MCG	1/12/04	AS-BUILT, PHASE II FIRE ALARM UPGRADE
J	MRC	AD	MCG	7/8/03	PHASE II FIRE ALARM UPGRADE
I	HYT	HYT	–	4/4/02	REPLACEMENT FIRE ALARM PROJECT
H	LDD	LDD	MCG	9/5/01	142C CLEANROOM MODS – PROJ FM1100
G	LDD	LDD	MCG	01/10/00	AS-BUILT– PROJ FN9100
F	LDD	LDD	MCG	12/6/99	REDRWN IN AUTOCAD & 77 REHAB MODS – PROJ FN9100

PROFESSIONAL SEAL (IF REVISION, APPLIES ONLY TO REVISED WORK)

ISSUE (PROGRESS, ESTIMATE, BID, CONSTRUCTION, CONFORMED, REVISION, RECORD)

77 FIRE ALARM

FIRE ALARM SYSTEM
LOGIC DIAGRAM FOR TR148

UNIVERSITY OF CALIFORNIA
LAWRENCE BERKELEY NATIONAL LABORATORY
FACILITIES DIVISION

DRAWN BY	LDD	DATE 12/6/1999
CHECKED BY	CON	12/6/1999
APPROVED BY	MCG	12/7/1999
CAD FILE PATH	00019336	
SCALE	As Noted	
DRAWING NO.	4B77E047L	SHEET 1 OF 1
PROJECT NO.	FA8040	