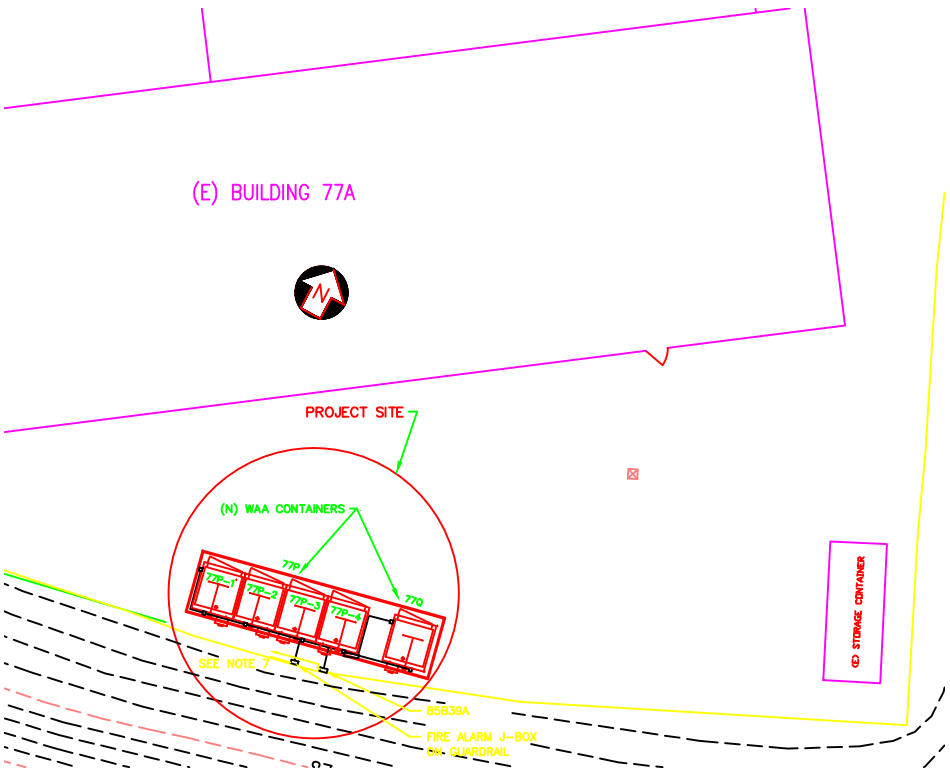

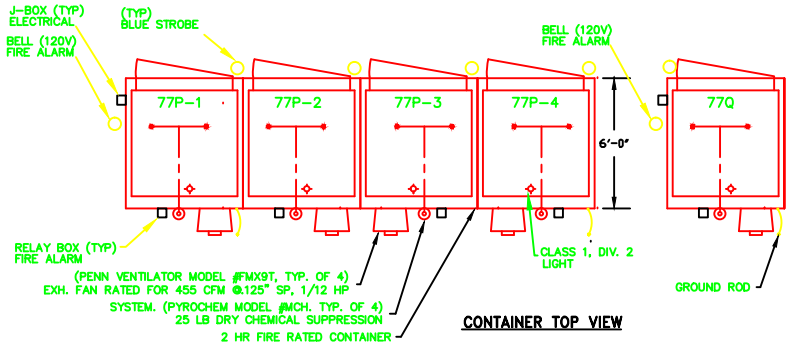

CONTAINER TOP VIEW

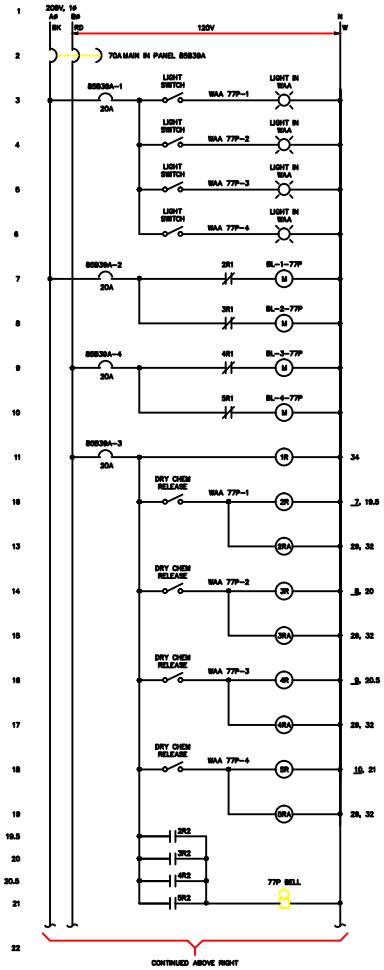

ELEMENTARY DIAGRAM
WAA STORAGE UNITS
77P-1, 2, 3 & 4 & 77Q

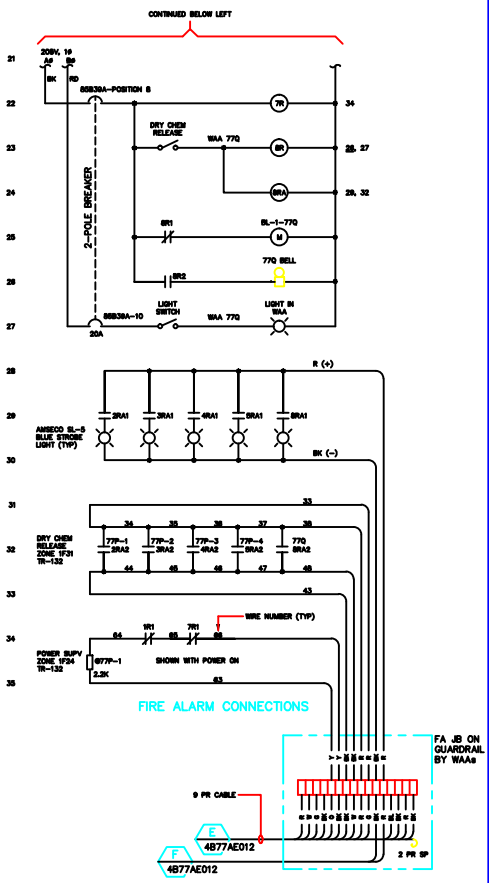

NOTES:

1. INSTALL A WEATHERPROOF FIRE ALARM RELAY BOX AND A BLUE STROBE ON EACH CONTAINER AND WIRE PER DETAIL AT RIGHT.
2. INSTALL ONE COMMON BELL FOR THE FOUR COMMON WAA'S, AND ONE BELL FOR THE SEPARATE WAA.
3. PROVIDE A 3/4" CONDUIT FROM THE WAA'S TO THE FIRE ALARM J-BOX ON THE GUARD RAIL.
4. INSTALL A 208V/120V, 3φ, 4W, 100AMP, 12 CKT POWER PANEL IN A WEATHER PROOF ENCLOSURE AND LABEL 85B39A. PROVIDE POWER TO EACH WAA PER DETAIL.
5. GROUND EACH CONTAINER BY A SEPARATE GROUND ROD.
6. REFERENCE THE FOLLOWING FIRE ALARM DRAWINGS: 4B77AE009C, 4B77AE012A, 4B77AE013A.
7. POWER FEEDERS ARE EXISTING FROM BLDG 77; FIRE ALARM FEEDERS ARE RUN THROUGH BLDG. 77.

REVISION NUMBER	DRAWN BY	CHECKED BY	APPR'D BY	DATE	REMARKS
C	LSR	ROB	MCG	2/3/96	AS BUILT REV B
B	RB	BHS	BHS	7/21/94	ADD WAA BLDG NUMBERS
A	RB	BS	BS	1/94	REDRAWN, ADD WAA CKTS

77A WAA'S
WASTE ACCUMULATION CONTAINER
ELECTRICAL & FIRE ALARM

UNIVERSITY OF CALIFORNIA
LAWRENCE BERKELEY NATIONAL LABORATORY
FACILITIES DEPARTMENT

		DATE
DRAWN BY	SC	06/28/93
CHECKED BY	PC	06/28/93
APPROVED BY	RMG	06/28/93
CAD FILE PATH	00007694	
SCALE	As Noted	
DRAWING NO.	4B77AE016C	
PROJECT NO.	120581	
SHEET	1 OF 1	