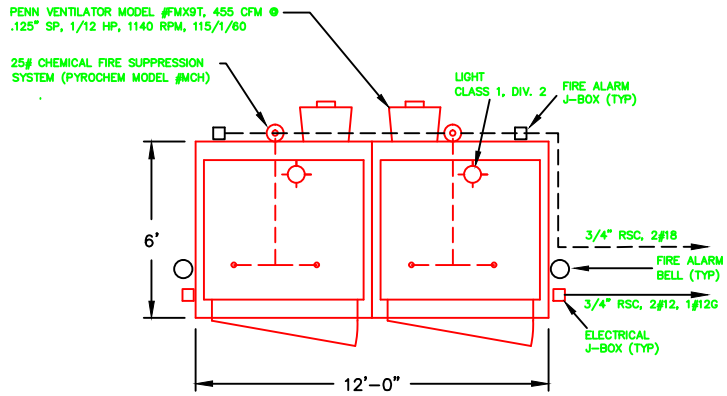

76M CONTAINER TOP VIEW

SCALE: 1/2" = 1'-0"

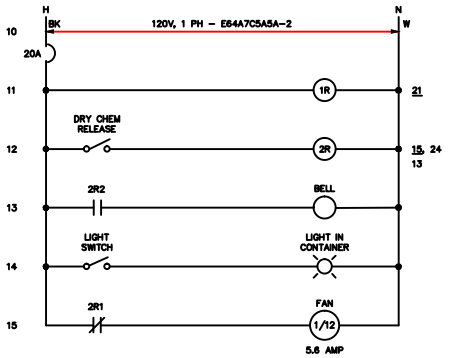

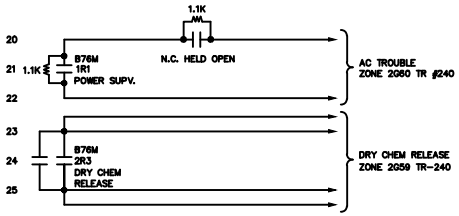

B76M MOTOR POOL WAA

(ONE OF TWO DRYCHEM RELEASES AT BLDG 76M)

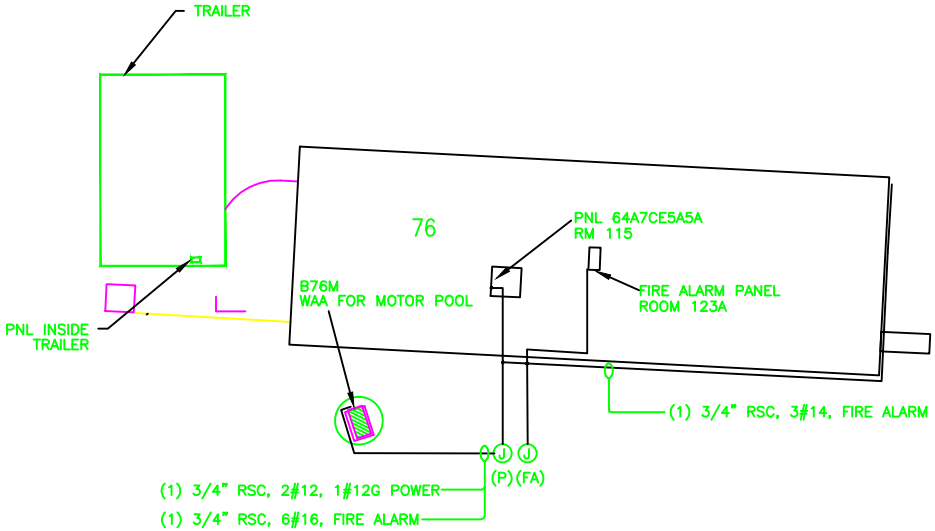

LOCATION PLAN

SCALE=NTS

REVISION NUMBER	DRAWN BY	CHECKED BY	APPROV'D BY	DATE	REMARKS
C	AD	MCG	MCG	6/29/01	AS-BUILT
B	RB	ROB	MCG	2/2/98	AS-BUILT
A	RB	BS	BS	12/93	ADD CKTS 10 THRU 45 & NOTES

76

WASTE ACCUMULATION CONTAINER

ELECTRICAL POWER PLAN

UNIVERSITY OF CALIFORNIA
LAWRENCE BERKELEY NATIONAL LABORATORY
FACILITIES DEPARTMENT

DRAWN BY	SC	DATE 08/31/93
CHECKED BY	PC	09/07/93
APPROVED BY	ROB	09/07/93
CAD FILE PATH	00012528	
SCALE	As Noted	
DRAWING NO.	4B76E019C	SHEET 1 OF 1
PROJECT NO.	120196	