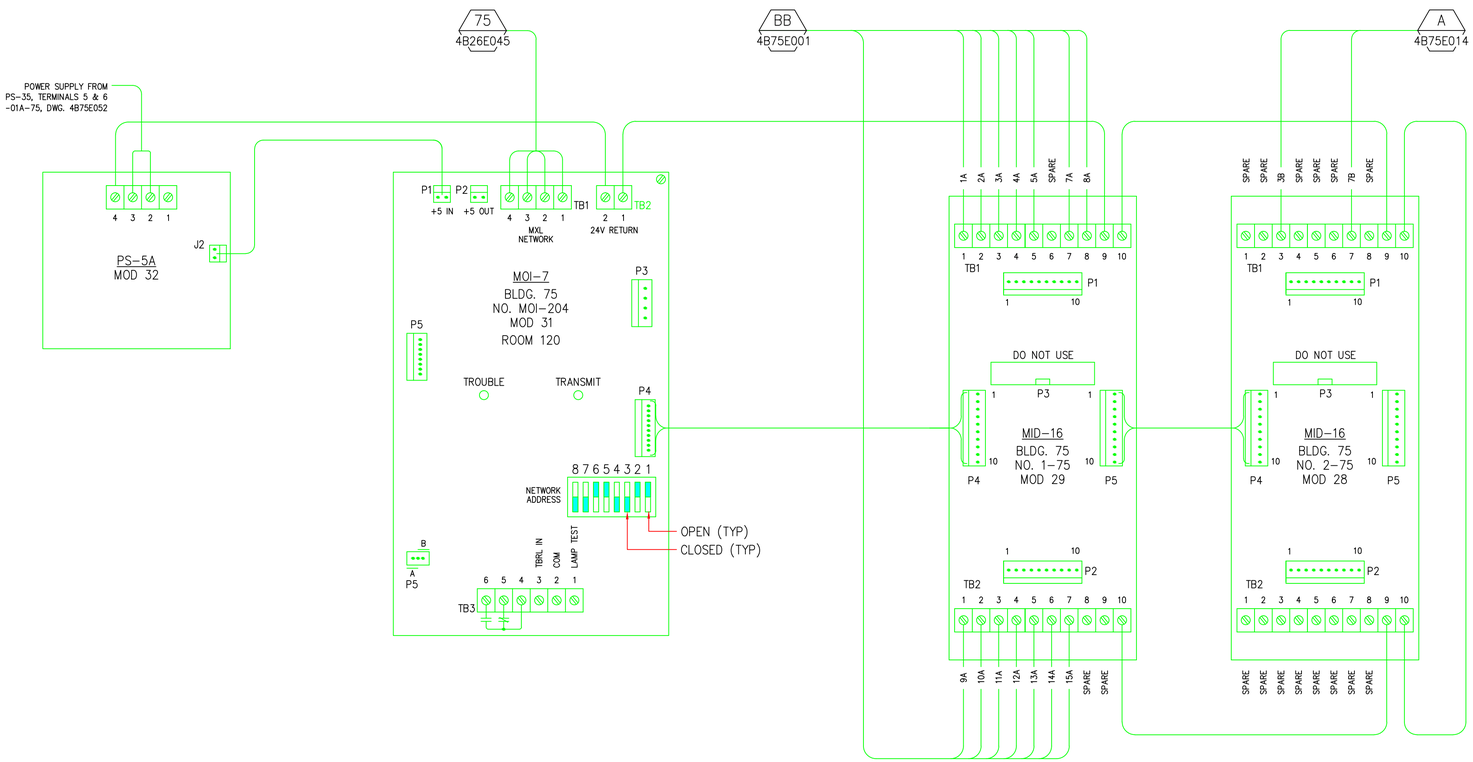

OLD ADDRESS	DESCRIPTION	MID-16 TERMINATION	MODULE TYPE & NO.	MXL NO. 7 AT B. 26 ADDRESS
1H01	WFS WEST SECTION	TB. 1 NO. 1	MID-16 NO. 1-75	7-204-1
1H02	WFS EAST SECTION AND TRAILER	TB. 1 NO. 2	MID-16 NO. 1-75	7-204-2
1H03	WFS WASTE HANDLING BLDG	TB. 1 NO. 3	MID-16 NO. 1-75	7-204-3
1H04	WFS BLDG. 75B	TB. 1 NO. 4	MID-16 NO. 1-75	7-204-4
1H05	FCB (5) N, S, & E SIDES	TB. 1 NO. 5	MID-16 NO. 1-75	7-204-5
1H06	NOT USED	N/A	N/A	N/A
1H07	FCB (2) & HEAT DETECTORS	TB. 1 NO. 7	MID-16 NO. 1-75	7-204-7
1H08	FCB (1) NE SIDE	TB. 1 NO. 8	MID-16 NO. 1-75	7-204-8
1H09	WFS BLDG 75C	TB. 2 NO. 1	MID-16 NO. 1-75	7-204-9
1H10	FCB (1) WASTE HANDLING BLDG	TB. 2 NO. 2	MID-16 NO. 1-75	7-204-10
1H11	BLDG 75B RISER VLV SUPV	TB. 2 NO. 3	MID-16 NO. 1-75	7-204-11
1H12	BLDG 75/75A RSR/ISO VLV SUPV	TB. 2 NO. 4	MID-16 NO. 1-75	7-204-12
1H13	WFS BLDG 75F	TB. 2 NO. 5	MID-16 NO. 1-75	7-204-13
1H14	BLDG 75F ISO VLV SUPV	TB. 2 NO. 6	MID-16 NO. 1-75	7-204-14
1H15	SYSTEM 3 SUPERVISION	TB. 2 NO. 7	MID-16 NO. 1-75	7-204-15
1H16	RISER+ISO VLV 75 EAST	TB. 2 NO. 8	MID-16 NO. 1-75	7-204-16

OLD ADDRESS	DESCRIPTION	MID-16 TERMINATION	MODULE TYPE & NO.	MXL NO. 7 AT B. 26 ADDRESS
2A65	MX-316 TROUBLE	N/A	N/A	N/A
2A66	NOT USED	N/A	N/A	N/A
2A67	NOT USED	N/A	N/A	N/A
2A68	NOT USED	N/A	N/A	N/A
2A69	NOT USED	N/A	N/A	N/A
2A70	DSD HEATERS RMS 007,008,009	TB. 1 NO. 3	MID-16 NO. 2-75	7-204-19
2A71	NOT USED	N/A	N/A	N/A
2A72	NOT USED	N/A	N/A	N/A
2A73	FAP SD	TB. 1 NO. 7	MID-16 NO. 2-75	7-204-23
2A74	NOT USED	N/A	N/A	N/A
2A75	NOT USED	N/A	N/A	N/A
2A76	NOT USED	N/A	N/A	N/A
2A77	NOT USED	N/A	N/A	N/A
2A78	NOT USED	N/A	N/A	N/A
2A79	NOT USED	N/A	N/A	N/A
2A80	NOT USED	N/A	N/A	N/A

AS BUILT

E

6/7/2013

REVISION NUMBER	DRAWN BY	CHECKED BY	APPR'D BY	DATE	REMARKS
E	DSV	LDD	MCD	6/7/13	AS BUILT PER FIELD VERIFICATION
D	AD	LDD	MCD	06/06/06	REVISED FOR MXL COPPER LOOP
C	AD	MCG	MCG	05/04/05	REVISED MXL NODE TO "2", GENERAL REV
B	AD	MCG	MCG	10/11/04	AS BUILT RECORD DRAWING
A	HYT	AD	MCG	09/05/03	PHASE II FIRE ALARM SYSTEM UPGRADE

PROFESSIONAL SEAL (IF REVISION, APPLIES ONLY TO REVISED WORK)

ISSUE (PROGRESS, ESTIMATE, BID, CONSTRUCTION, CONFORMED, REVISION, RECORD)

75 FIRE ALARM SYSTEM

REPLACEMENT FIRE ALARM SYSTEM

MOI/MID MODULE ARRANGEMENT, LOOP 7

UNIVERSITY OF CALIFORNIA
LAWRENCE BERKELEY NATIONAL LABORATORY
FACILITIES DIVISION

DRAWN BY HYT DATE 2/12/2002
CHECKED BY HYT 2/12/2002
APPROVED BY
CAD FILE PATH
SCALE As Noted
DRAWING NO. 4B75E054E
SHEET
PROJECT NO. FE5011
1 OF 1