LBL ZONE

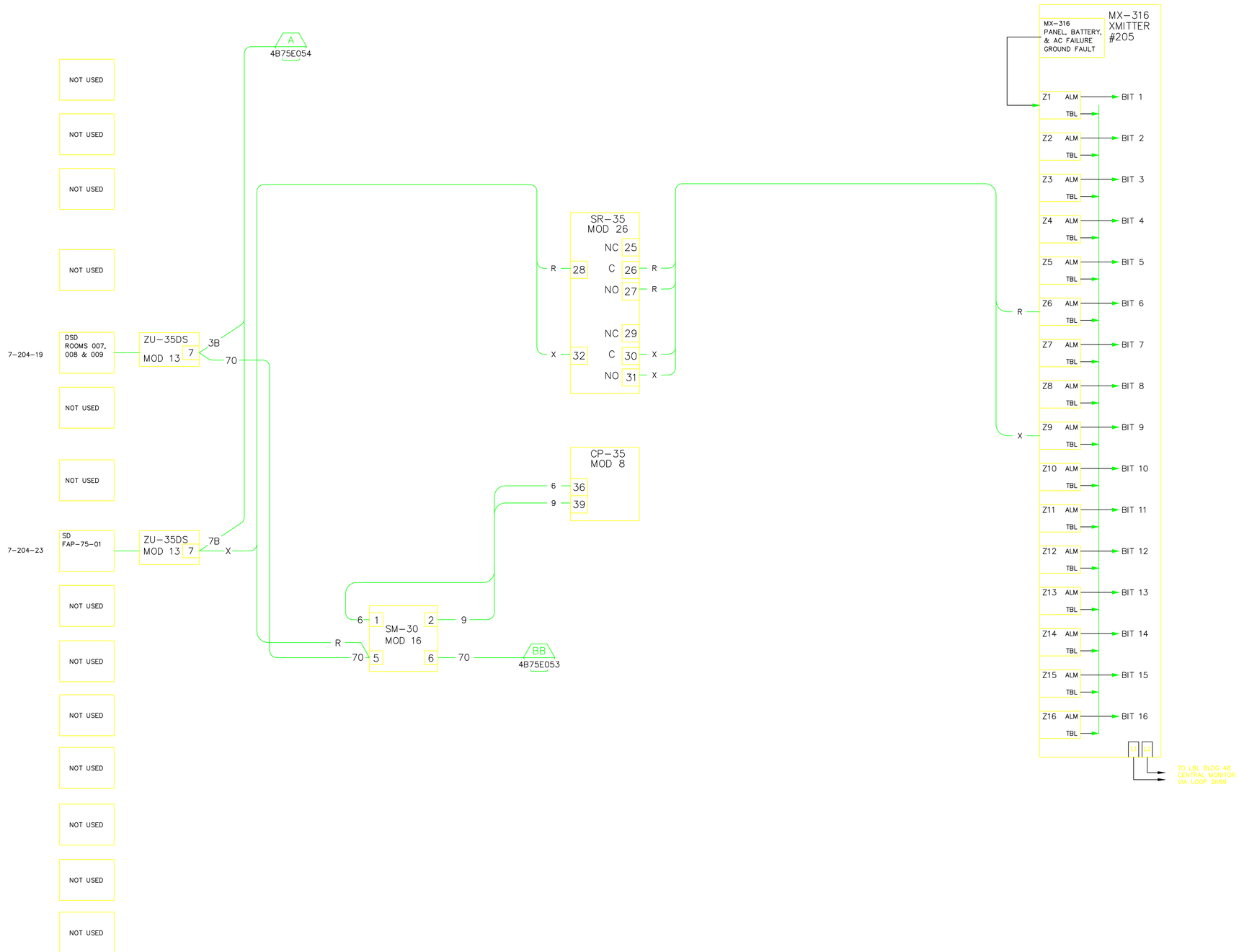

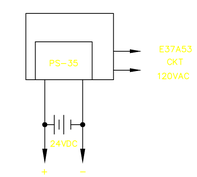

REFERENCE DRAWINGS

4B75E015 – MX-316 DRAWING
4B75E001 – LOGIC AND DEVICE WIRING
4B75E054 – DEVICE AND FIELD CONNECTIVITY

AS BUILT
K
6/7/13

REVISION NUMBER	DRAWN BY	CHECKED BY	APPR'D BY	DATE	REMARKS
K	DSV	LDD	MCD	6/7/13	AS BUILT PER FIELD VERIFICATION
J	AD	MCG	MCG	10/05/04	AS BUILT RECORD DRAWING
I	MRC	AD	MCG	9/05/03	PHASE II FIRE ALARM SYSTEM UPGRADE
G	HYT	HYT	–	2/1/02	REPLACEMENT FIRE ALARM PROJECT
F	LM	ROB	MCG	2/28/97	GENERAL REVISION
E	ROB				AS-BUILT
D	ROB	MCG	MCG	10/12/94	ADD ZONE 4, GLOVE BOX DETECT

PROFESSIONAL SEAL (IF REVISION, APPLIES ONLY TO REVISED WORK)
ISSUE (PROGRESS, ESTIMATE, BID, CONSTRUCTION, CONFORMED, REVISION, RECORD)

75 XMITTER 205
FIRE ALARM SYSTEM
LOGIC DRAWING

UNIVERSITY OF CALIFORNIA
LAWRENCE BERKELEY NATIONAL LABORATORY
FACILITIES DIVISION

DRAWN BY	TPB	DATE 6/10/1993
CHECKED BY	ROB	6/16/1993
APPROVED BY	RG	6/16/1993
CAD FILE PATH		
SCALE	As Noted	
DRAWING NO.	4B75E014K	SHEET
PROJECT NO.	WE9379	1 OF 1