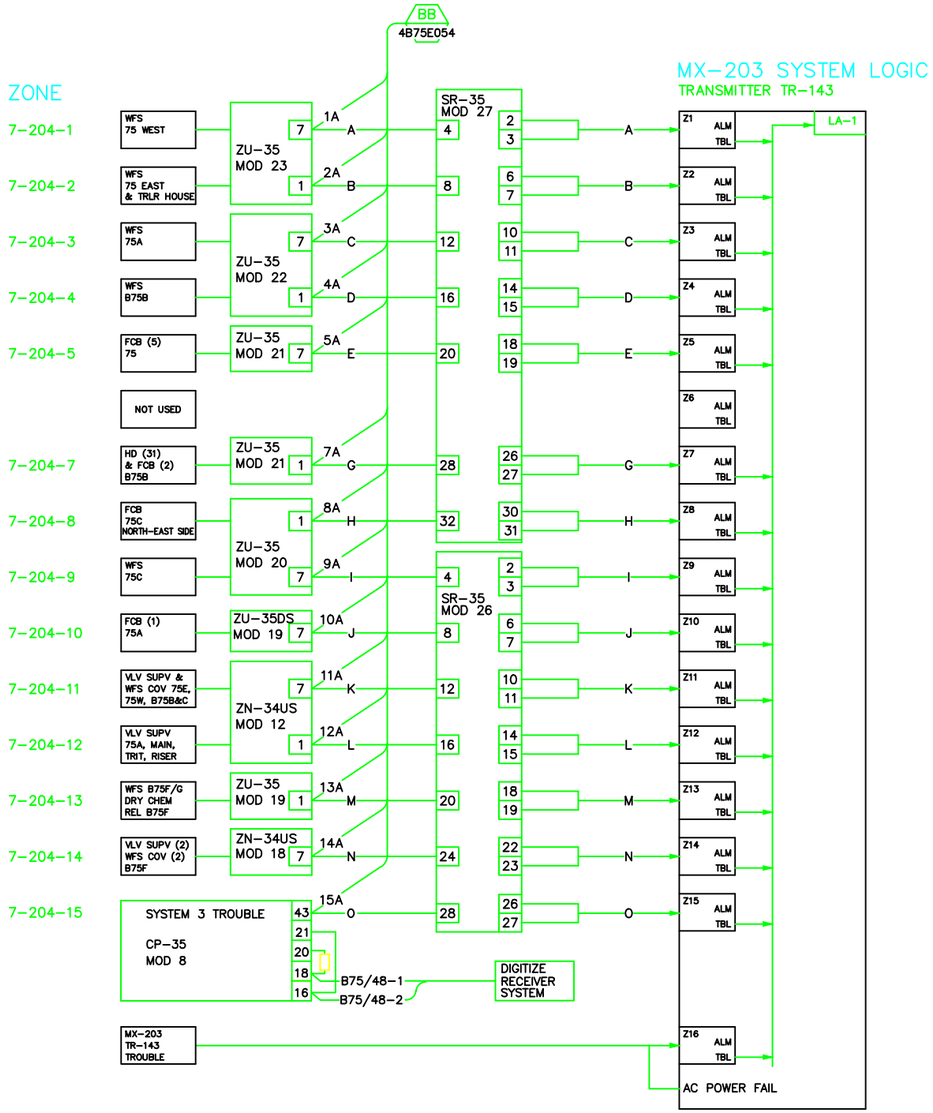

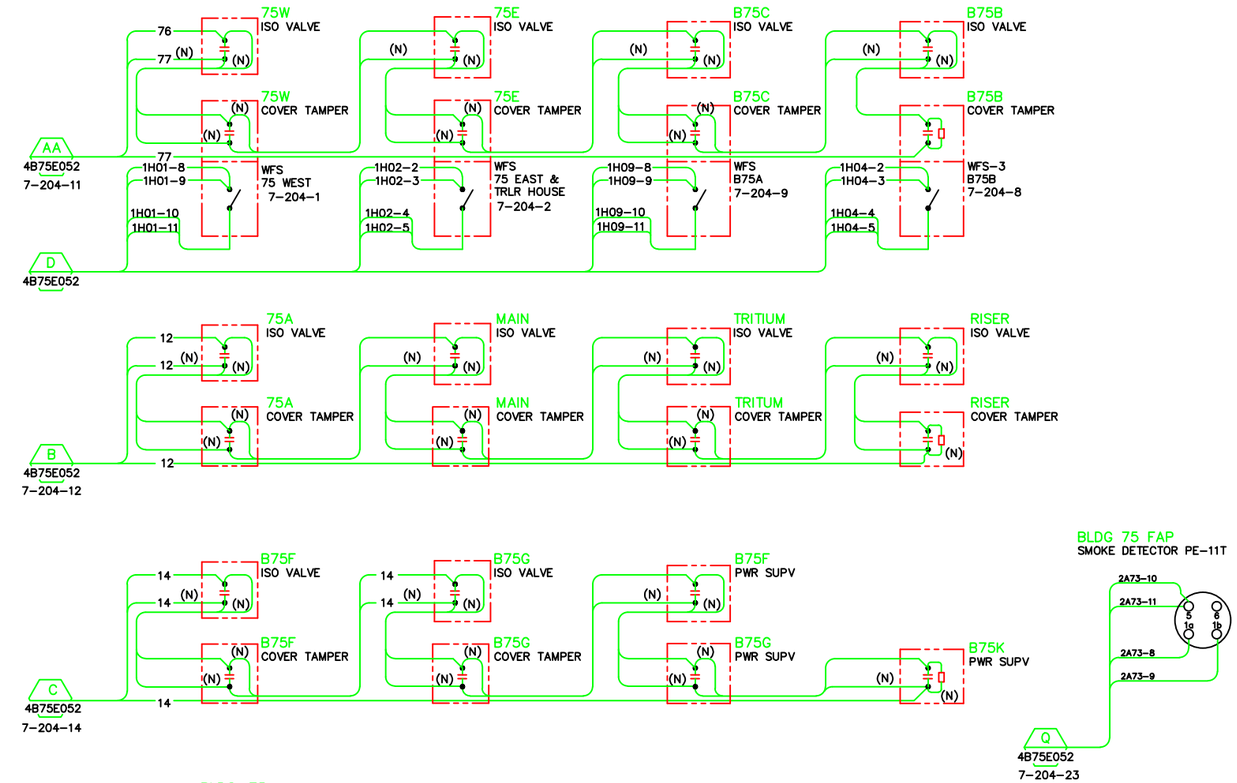

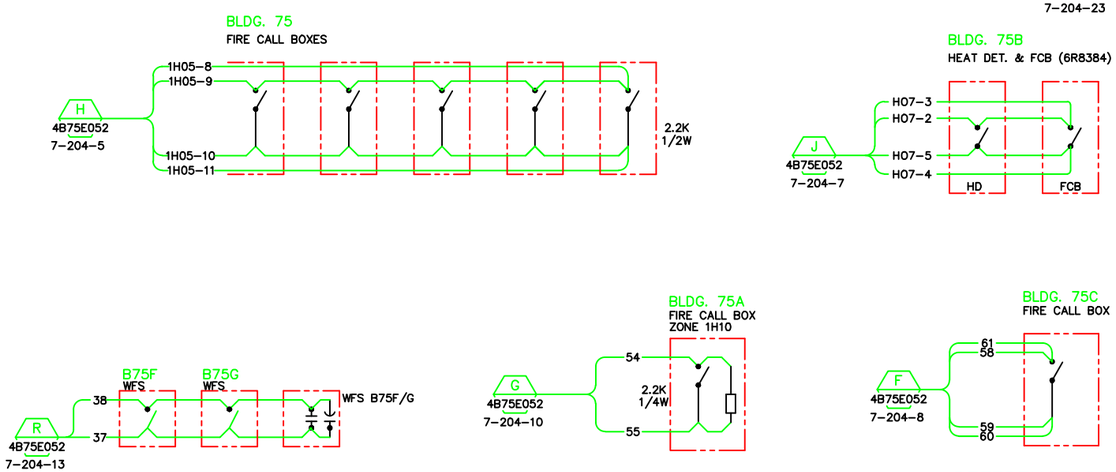

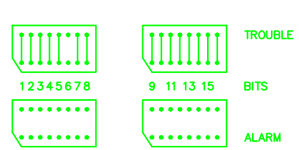

PROGRAM PLUG CONNECTIONS

TRANSMITTER ID SWITCH
00101010 (142+1 = 143)

REFERENCE DRAWINGS

1. 4B75E014 XMITTER 205 LOGIC
2. 4B75E015 MX-316 CONNECTIONS
3. 4B75E016 SYS 3 CONNECTIONS
4. 4B75E052 SYS 3 CONNECTIONS
5. 4B75E053 SYS 3 CONNECTIONS

AS BUILT
T
6/7/13

REVISION NUMBER	DRAWN BY	CHECKED BY	APPV'D BY	DATE	REMARKS
T	DSV	LDD	MCD	6/7/13	AS BUILT PER FIELD VERIFICATION
S	AD	MCG	MCG	08/04/06	REVISED FOR MXL/DIGITIZE SYSTEMS
R	AD	MCG	MCG	10/07/04	AS BUILT RECORD DRAWING
Q	MRC	AD	MCG	8/22/03	PHASE II FIRE ALARM SYSTEM UPGRADE
P	HYT	HYT	–	2/15/02	REPLACEMENT FIRE ALARM PROJECT
O	ROB	MCG	MCG	6/8/97	AS-BUILT, JO 022959
N	ROB	MCG	MCG	4/11/97	REMOVE 75L, M & N, JO 022959

PROFESSIONAL SEAL (IF REVISION, APPLIES ONLY TO REVISED WORK)
ISSUE (PROGRESS, ESTIMATE, BID, CONSTRUCTION, CONFORMED, REVISION, RECORD)

75 TRANSMITTER #143
FIRE ALARM SYSTEM
LOGIC AND DEVICE WIRING

UNIVERSITY OF CALIFORNIA
LAWRENCE BERKELEY NATIONAL LABORATORY
FACILITIES DIVISION

		DATE
DRAWN BY	ROB	12/1/1993
CHECKED BY	JH	12/1/1993
APPROVED BY	BHS	12/6/1993
CAD FILE PATH		
SCALE	As Noted	
DRAWING NO.	4B75E001T	SHEET 1 OF 1
PROJECT NO.	FE5011	