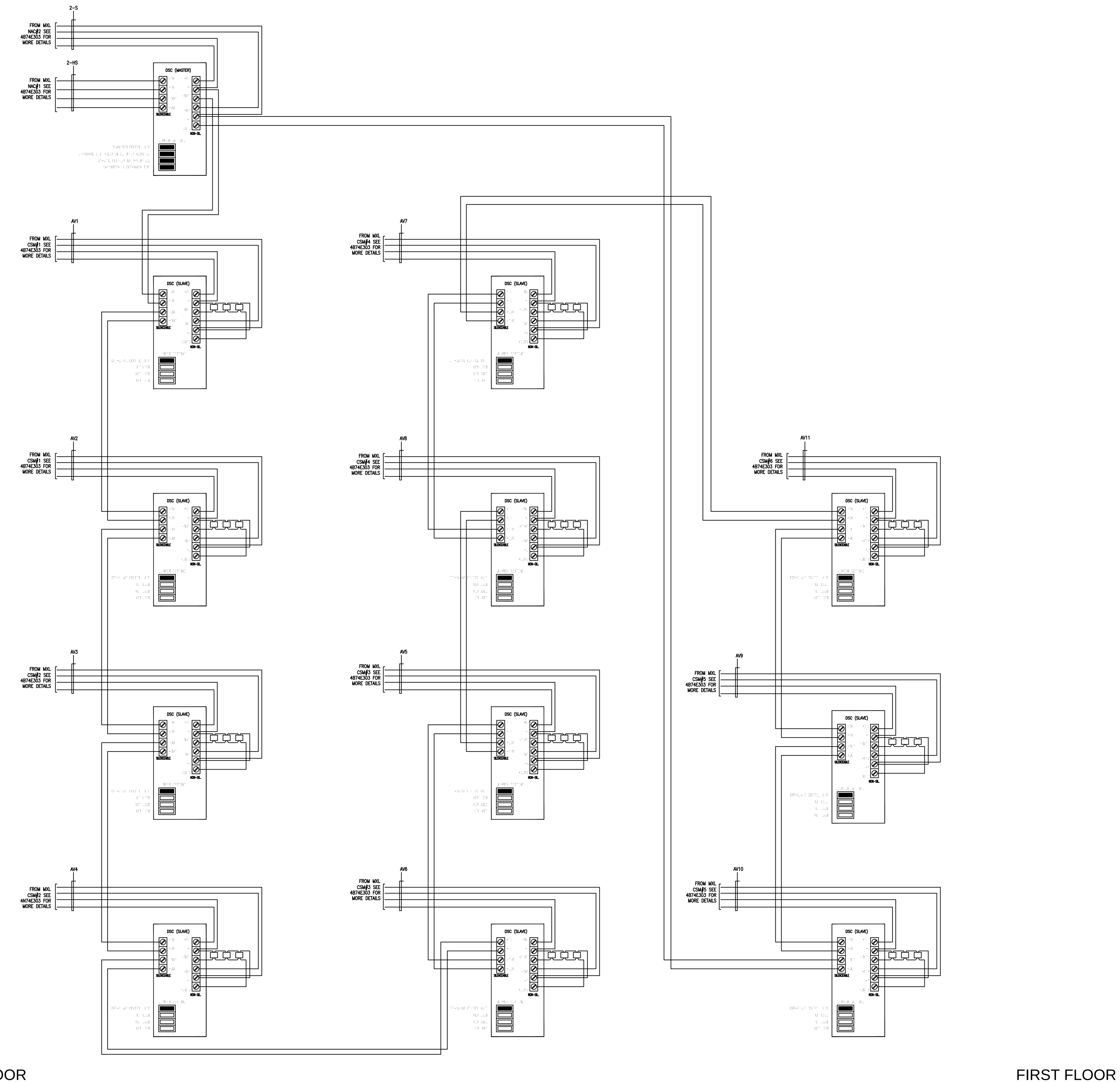

DSC DUAL SYNCHRONIZATION MODULE WIRING DIAGRAM

PROFESSIONAL SEAL (IF REVISION, APPLIES ONLY TO REVISED WORK)

AS BUILT
—
08/28/13

ISSUE (PROGRESS, ESTIMATE, BID, CONSTRUCTION, CONFORMED, REVISION, RECORD)

REVISION NUMBER	DRAWN BY	CHECKED BY	APPR'D BY	DATE	REMARKS
_	DSV	LDD	MCD	08/28/13	AS BUILT FROM A/E RECORD DWGS

74 FIRE ALARM SYSTEM
DSC DUAL SYNCHRONIZATION MODULE WIRING DIAGRAM

UNIVERSITY OF CALIFORNIA
LAWRENCE BERKELEY NATIONAL LABORATORY
FACILITIES DIVISION

		DATE
DRAWN BY	DSV	08/28/13
CHECKED BY	LDD	09/03/2013
APPROVED BY	MCD	09/03/2013

SCALE AS NOTED

DRAWING NO. 4B74E305

PROJECT NO. FN9200

SHEET 4 OF 20