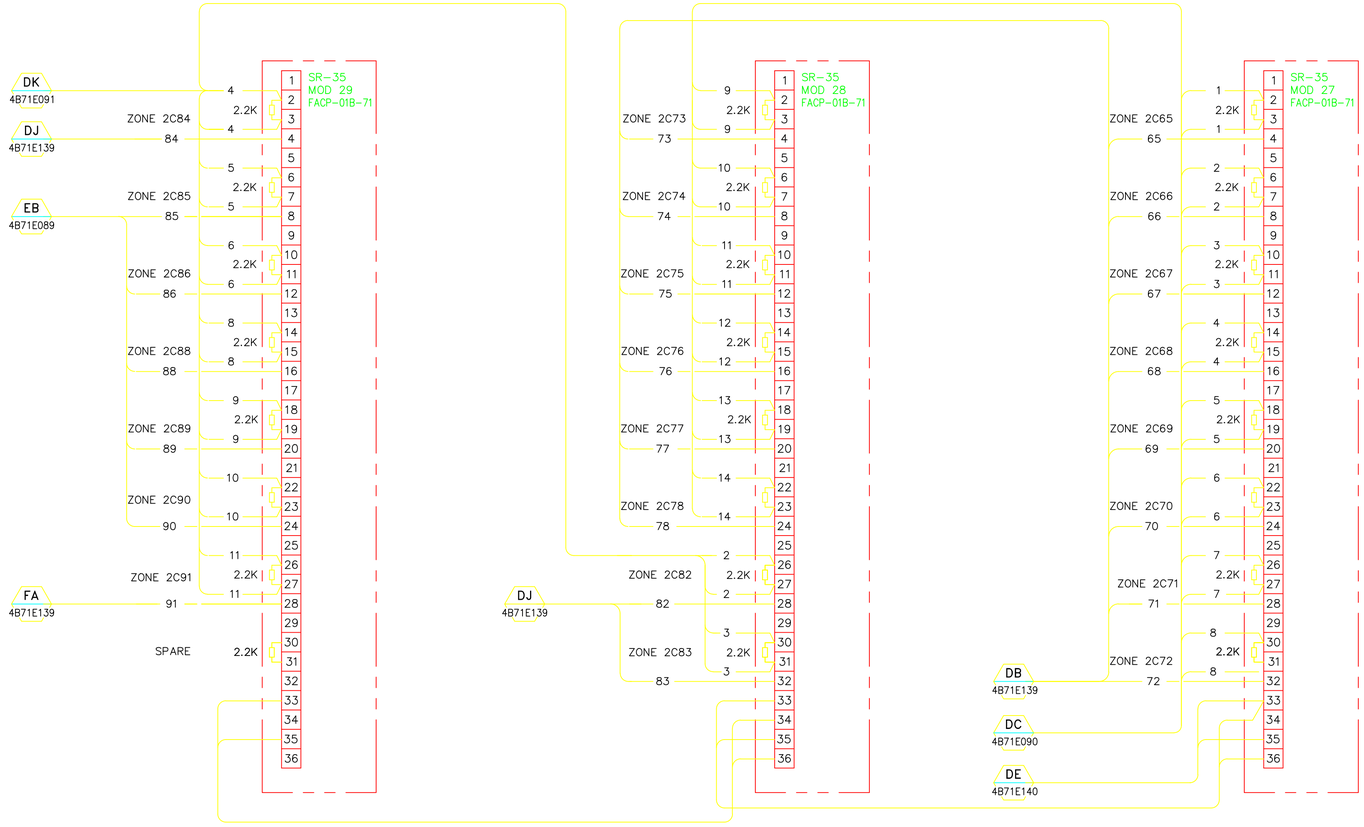

7 DETAIL
4B71E139

6 DETAIL
4B71E139

5 DETAIL
4B71E139

PROFESSIONAL SEAL (IF REVISION, APPLIES ONLY TO REVISED WORK)	TITLE 2 CONSTRUCTION 9/8/2004	REVISION NUMBER	DRAWN BY	CHECKED BY	APPR'D BY	DATE	REMARKS	71 FIRE ALARM SYSTEM SR-35 RELAY CONNECTION DIAGRAM	DRAWN BY MRC 9/8/2004
	ISSUE (PROGRESS, ESTIMATE, BID, CONSTRUCTION, CONFORMED, REVISION, RECORD)							UNIVERSITY OF CALIFORNIA LAWRENCE BERKELEY NATIONAL LABORATORY FACILITIES DIVISION	CHECKED BY AD 9/8/2004
									APPROVED BY MCG 9/8/2004
									CAD FILE PATH 00018317
									SCALE Full
									DRAWING NO. 4B71E142_
									PROJECT NO. FB4010
									SHEET 1 OF 1