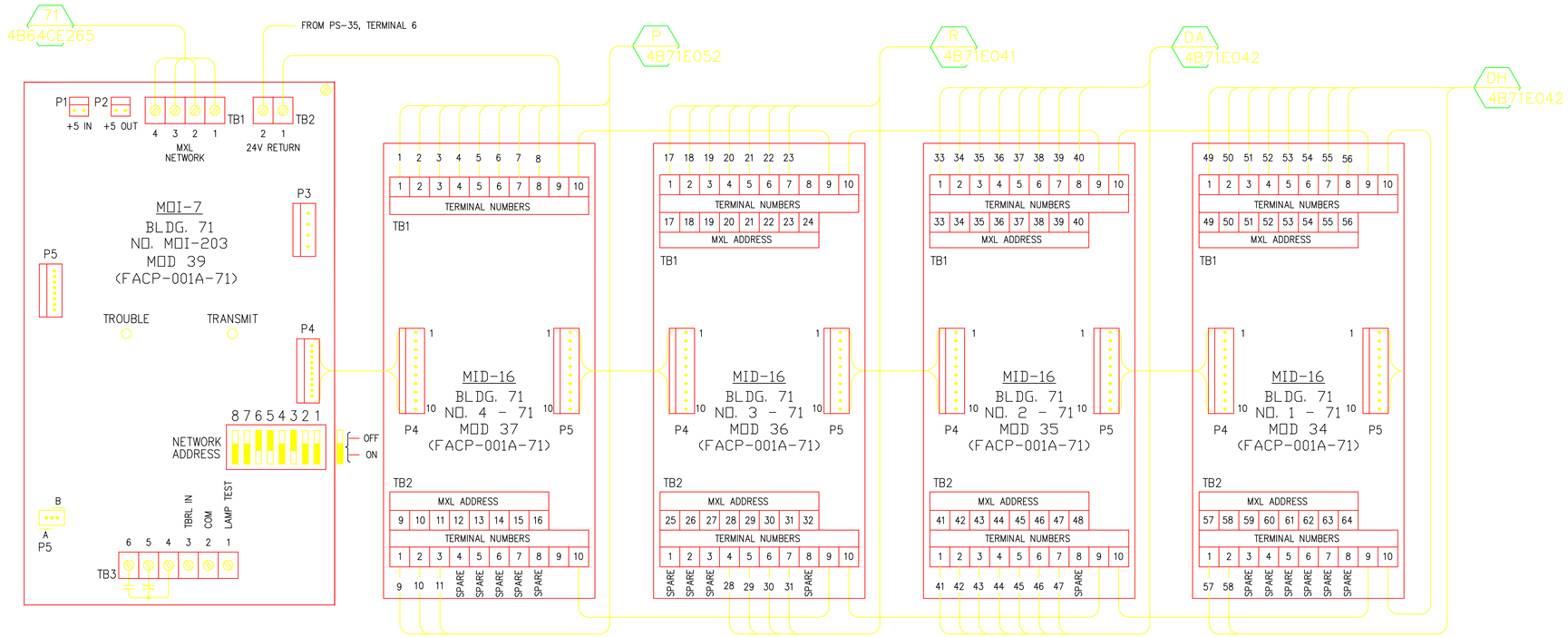

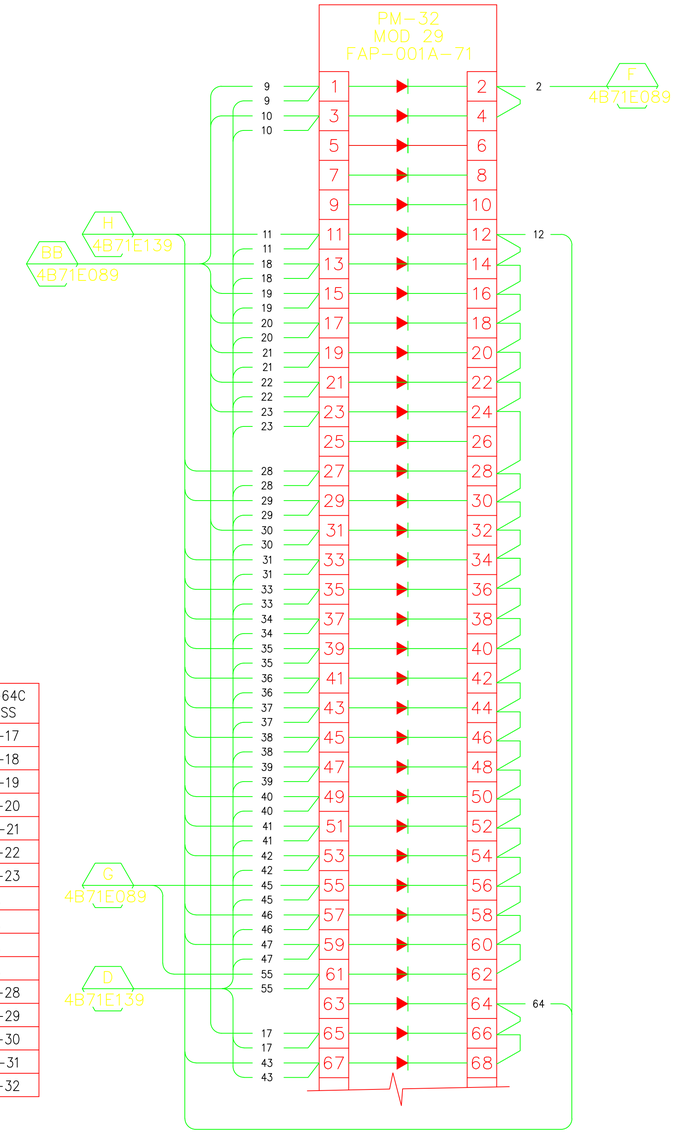

DETAIL 1
4B77E139

OLD ADDRESS	DESCRIPTION	MID-16 TERMINATION	MODULE TYPE & NO. 1	MXL 03-64C ADDRESS
2C81	SUPERVISION CT-1 : RISER VALVE	TB1, No. 1	MID 16, 1-71	3-203-49
2C82	SUPERVISION CT-2 & 3 : RISER VALVE	TB1, No. 2	MID 16, 1-71	3-203-50
2C83	SUPERVISION NORTH RISER VALVE RISER &/OR ZONE 7	TB1, No. 3	MID 16, 1-71	3-203-51
2C84	SUPERVISION NORTH RISER	TB1, No. 4	MID 16, 1-71	3-203-52
2C85	SUPERVISION SUPPLY VALVES FOR SOUTH RISER & BLDG. 71B	TB1, No. 5	MID 16, 1-71	3-203-53
2C86	SUPERVISION SOUTH RISER	TB1, No. 6	MID 16, 1-71	3-203-54
2C87	DUCT DETECTOR AHU-27/32	TB1, No. 7	MID 16, 1-71	3-203-55
2C88	SUPERVISION, BLDG. 71B ISOLATION VALVES	TB1, No. 8	MID 16, 1-71	3-203-56
2C89	SUPERVISION RISER VALVE	TB2, No. 1	MID 16, 1-71	3-203-57
2C90	SUPERVISION NORTH RISER	TB2, No. 2	MID 16, 1-71	3-203-58
2C91	NOT USED	N/A	N/A	3-203-59
2C92	NOT USED	N/A	N/A	3-203-60
2C93	NOT USED	N/A	N/A	3-203-61
2C94	NOT USED	N/A	N/A	3-203-62
2C95	NOT USED	N/A	N/A	3-203-63
2C96	NOT USED	N/A	N/A	3-203-64

OLD ADDRESS	DESCRIPTION	MID-16 TERMINATION	MODULE TYPE & NO. 2	MXL 03-64C ADDRESS
2C65	WATERFLOW COOLING TOWER #1	TB1, No. 1	MID 16, NO.2	3-203-33
2C66	WATERFLOW COOLING TOWER #2 & 3	TB1, No. 2	MID 16, NO.2	3-203-34
2C67	WATERFLOW, ZONE 6 NO. RISER	TB1, No. 3	MID 16, NO.2	3-203-35
2C68	WATERFLOW, ZONE 7-71A AND PUMP PAD	TB1, No. 4	MID 16, NO.2	3-203-36
2C69	WATERFLOW, ZONE 2 SOUTH RISER	TB1, No. 5	MID 16, NO.2	3-203-37
2C70	WATERFLOW-ZONE 1 ROOMS 252-283 & HALLS	TB1, No. 6	MID 16, NO.2	3-203-38
2C71	WATER FLOW,ZONE 11-CAVES L,M,N,P, & R	TB1, No. 7	MID 16, NO.2	3-203-39
2C72	WATERFLOW, ZONE 3	TB1, No. 8	MID 16, NO.2	3-203-40
2C73	WATERFLOW, ZONE 4	TB2, No. 1	MID 16, NO.2	3-203-41
2C74	WATERFLOW, ZONE 5	TB2, No. 2	MID 16, NO.2	3-203-42
2C75	WATERFLOW, ZONE 8	TB2, No. 3	MID 16, NO.2	3-203-43
2C76	WATERFLOW, SPRINKLERS-BLDG.	TB2, No. 4	MID 16, NO.2	3-203-44
2C77	WATERFLOW, ZONE 9	TB2, No. 5	MID 16, NO.2	3-203-45
2C78	WATERFLOW, ZONE 10	TB2, No. 6	MID 16, NO.2	3-203-46
2C79	FIRE SMOKE DETECTOR	TB2, No. 7	MID 16, NO.2	3-203-47
2C80	NOT USED	N/A	N/A	3-203-48

OLD ADDRESS	DESCRIPTION	MID-16 TERMINATION	MODULE TYPE & NO. 3	MXL 03-64C ADDRESS
2C49	FIRE CALL BOXES, ZONE 8	TB1, No. 1	MID 16, NO.3	3-203-17
2C50	FIRE CALL BOXES, ZONE 6 & 7	TB1, No. 2	MID 16, NO.3	3-203-18
2C51	FIRE CALL BOXES, ZONE 5	TB1, No. 3	MID 16, NO.3	3-203-19
2C52	FIRE CALL BOXES, ZONE 4	TB1, No. 4	MID 16, NO.3	3-203-20
2C53	FIRE CALL BOXES, ZONE 3	TB1, No. 5	MID 16, NO.3	3-203-21
2C54	HEAT DETECTORS & FCB	TB1, No. 6	MID 16, NO.3	3-203-22
2C55	FCB'S HEAT & DUCT DETECTOR	TB1, No. 7	MID 16, NO.3	3-203-23
2C56	NOT USED	N/A	N/A	N/A
2C57	NOT USED	N/A	N/A	N/A
2C58	NOT USED	N/A	N/A	N/A
2C59	NOT USED	N/A	N/A	N/A
2C60	HEAT DETECTORS	TB2, No. 4	MID 16, NO.3	3-203-28
2C61	SD'S DUCT DETECTORS, AHU-32	TB2, No. 5	MID 16, NO.3	3-203-29
2C62	SMOKE DETECTORS	TB2, No. 6	MID 16, NO.3	3-203-30
2C63	SMOKE DETECTORS	TB2, No. 7	MID 16, NO.3	3-203-31
2C64	NOT USED	N/A	N/A	3-203-32

OLD ADDRESS	DESCRIPTION	MID-16 TERMINATION	MODULE TYPE & NO. 4	MXL 03-64C ADDRESS
2E17	ISOLATION VALVE	TB1, No. 1	MID 16, 4-71	3-203-1
2E18	ISOLATION VALVE	TB1, No. 2	MID 16, 4-71	3-203-2
2E19	ISOLATION VALVE	TB1, No. 3	MID 16, 4-71	3-203-3
2E20	ISOLATION VALVE	TB1, No. 4	MID 16, 4-71	3-203-4
2E21	ISOLATION VALVE	TB1, No. 5	MID 16, 4-71	3-203-5
2E22	ISOLATION VALVE	TB1, No. 6	MID 16, 4-71	3-203-6
2E23	ISOLATION VALVE	TB1, No. 7	MID 16, 4-71	3-203-7
2E24	ISOLATION VALVE	TB1, No. 8	MID 16, 4-71	3-203-8
2E26	SMOKE DETECTOR, SUBSTATION	TB2, No. 1	MID 16, 4-71	3-203-9
2E27	FIRE CALL BOXES, SUBSTATION	TB2, No. 2	MID 16, 4-71	3-203-10
	SD AT "FACP"	TB2, No. 3	MID 16, 4-71	3-203-11
	NOT USED	N/A	N/A	3-203-12
2E29	NOT USED	N/A	N/A	3-203-13
2E30	NOT USED	N/A	N/A	3-203-14
2E31	NOT USED	N/A	N/A	3-203-15
2E32	NOT USED	N/A	N/A	3-203-16

ASBUILT REVISION B 12/12/2007

REVISION NUMBER	DRAWN BY	CHECKED BY	APPR'D BY	DATE	REMARKS
B	AD	LDD	MCD	12/12/07	AS-BUILT RECORD DRAWING
A	AD	LDD	MCD	03/13/06	REVISED FOR MXL COPPER LOOP

PROFESSIONAL SEAL (IF REVISION, APPLIES ONLY TO REVISED WORK)

ISSUE (PROGRESS, ESTIMATE, BID, CONSTRUCTION, CONFORMED, REVISION, RECORD)

71 FIRE ALARM SYSTEM
MOI/MID MODULE ARRANGEMENT
AND PM-32, LOOP NO. 3

UNIVERSITY OF CALIFORNIA
LAWRENCE BERKELEY NATIONAL LABORATORY
FACILITIES DIVISION

		DATE
DRAWN BY	MRC	6/8/2004
CHECKED BY	AD	6/8/2004
APPROVED BY	MCG	6/8/2004
CAD FILE PATH	00022543	
SCALE	Full	
DRAWING NO.	4B71E141B	
PROJECT NO.	FB4010	
SHEET	1 OF 1	