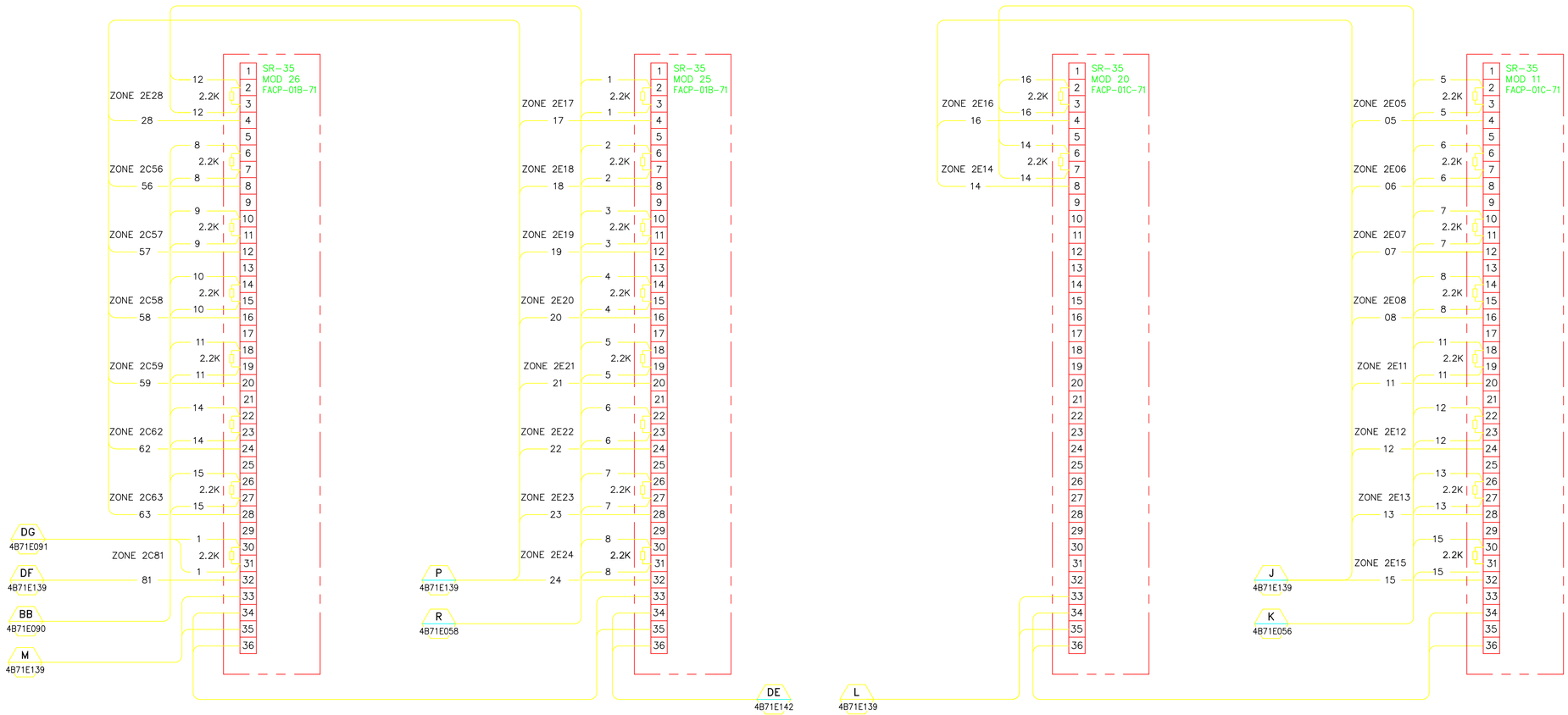

	TITLE 2 CONSTRUCTION 9/8/2004							71 FIRE ALARM SYSTEM SR-35 RELAY CONNECTION DIAGRAM	DRAWN BY MRC DATE 9/8/2004
									CHECKED BY AD 9/8/2004
									APPROVED BY MCG 9/8/2004
									CAD FILE PATH 00018302
									SCALE Full
								UNIVERSITY OF CALIFORNIA LAWRENCE BERKELEY NATIONAL LABORATORY FACILITIES DIVISION	DRAWING NO. 4B71E140_ SHEET 1 OF 1
PROFESSIONAL SEAL (IF REVISION, APPLIES ONLY TO REVISED WORK)	ISSUE (PROGRESS, ESTIMATE, BID, CONSTRUCTION, CONFORMED, REVISION, RECORD)	REVISION NUMBER	DRAWN BY	CHECKED BY	APPR'D BY	DATE	REMARKS		PROJECT NO. FB4010