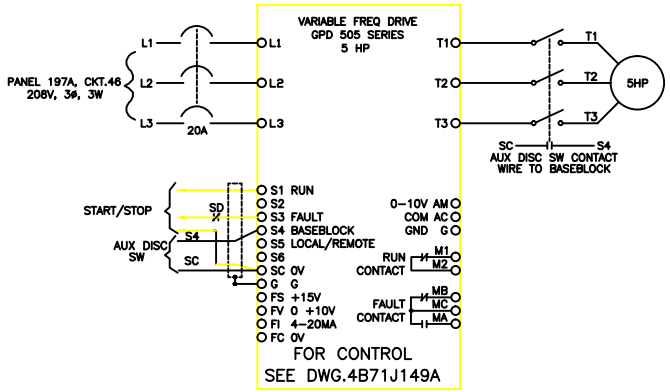

1 E4 AHU-30-71 VFD WIRING

SCALE: NONE

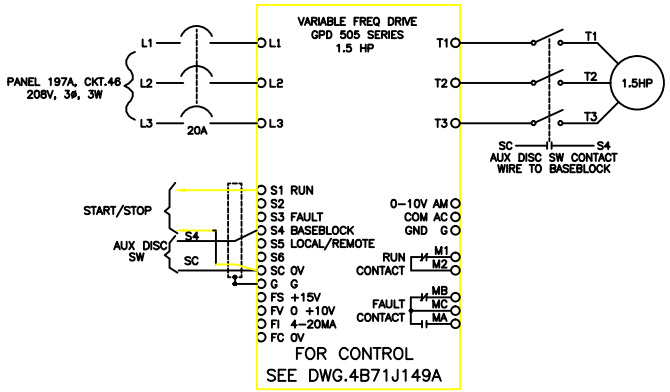

2 E4 BL-56-71 VFD WIRING

SCALE: NONE

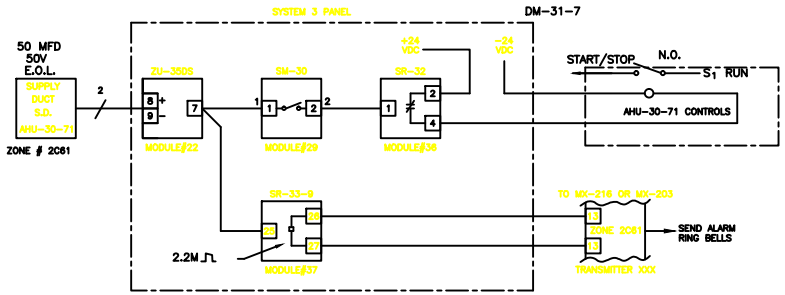

3 E4 SMOKE DUCT DETECTOR

SCALE: NTS

REVISION NUMBER	DRAWN BY	CHECKED BY	APPROVED BY	DATE	REMARKS
A	IPM	VDA	MG	11/03/98	AS-BUILT

71 RM 001A & 106
MODIFICATIONS
WIRING DIAGRAM LEGEND & NOTES

UNIVERSITY OF CALIFORNIA LAWRENCE BERKELEY LABORATORY
FACILITIES DEPARTMENT

DRAWN BY	TK	06/18/99
CHECKED BY	VDA	06/18/99
APPROVED BY	MG	06/18/99
CAD FILE PATH	00009893	
SCALE	As Noted	
DRAWING NO.	4B71E104A	SHEET E-4
PROJECT NO.	W38005	4 OF 5