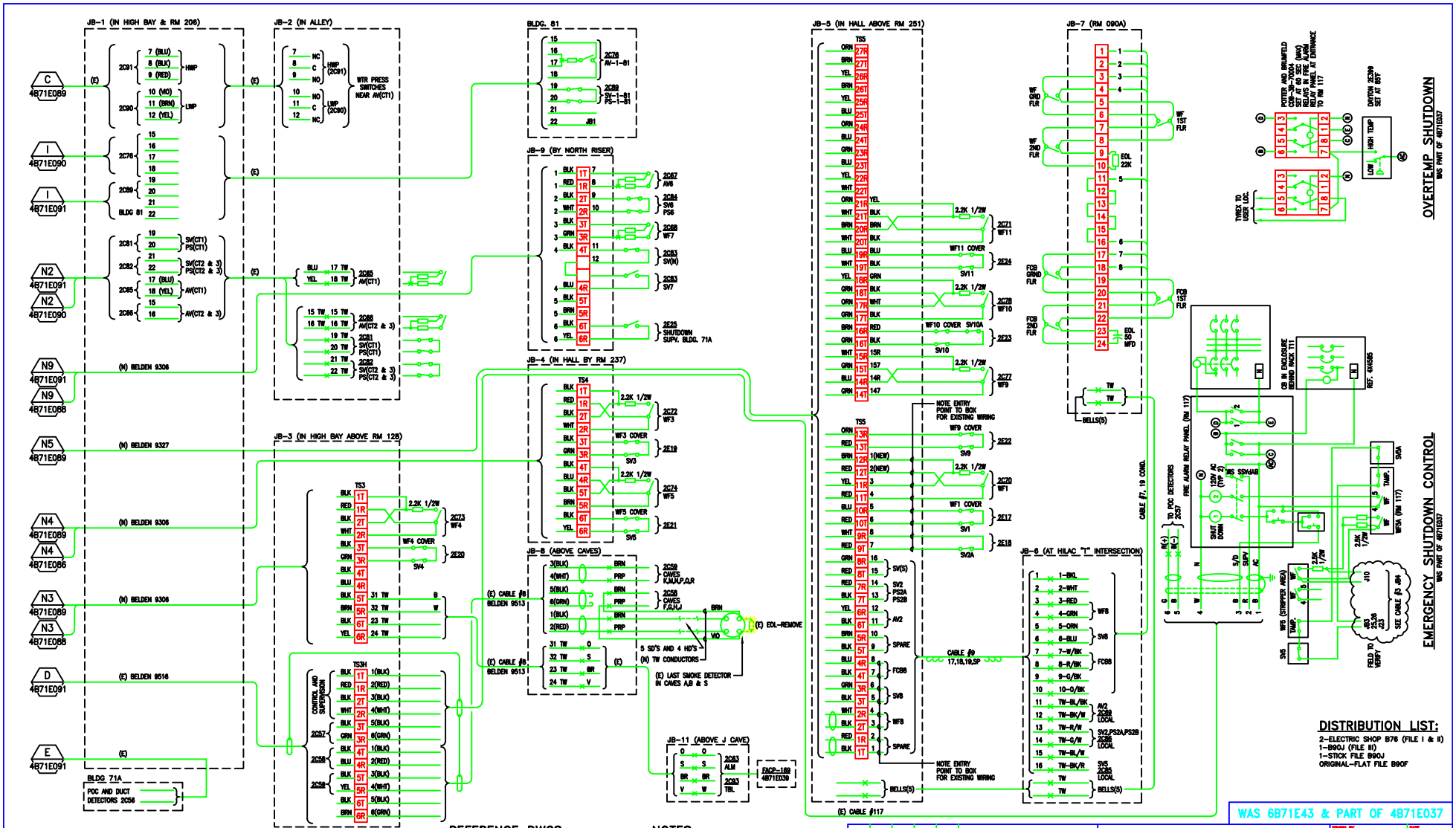

FIRE ALARM DRAWING WITH CONTACTS SHOWN IN SUPERVISORY CONDITION SEE DWG. 4B71E049 FOR DEVICE LOCATIONS SERVED FROM JB3, 4 & 5

REFERENCE DWGS:

1. 6R9613 BELL INTERFACE SCHEMATIC & ASSEMBLY
2. 4B71E046 RELAY INTERCONNECTION DIAGRAM
3. 6R9642 MX-203 TERMINATION ASSEMBLY
4. 4B71E088 PANEL INTERCONNECTION DIAGRAM
5. 4B71E089 PANEL INTERCONNECTION DIAGRAM
6. 4B71E090 PANEL INTERCONNECTION DIAGRAM
7. 4B71E091 PANEL INTERCONNECTION DIAGRAM

NOTES:

1. (E) INDICATES EXISTING
2. SEE DWG. 4B71E041 FOR REFERENCE DWGS.
3. RESISTORS ARE 2.2K 1/2W, UNLESS OTHERWISE NOTED.

DISTRIBUTION LIST:

2-ELECTRIC SHOP B76 (FILE I & II)
1-B90J (FILE III)
1-STICK FILE B90J
ORIGINAL-FLAT FILE B90F

WAS 6B71E43 & PART OF 4B71E037

REVISION NUMBER	DRAWN BY	CHECKED BY	APPVD BY	DATE	REMARKS
A	LM		MG	5/19/97	AUTOCAD CONVERSION

71 BLDG
FIRE ALARM SYSTEM
PANEL INTERCONNECTION DIAGRAM

UNIVERSITY OF CALIFORNIA LAWRENCE BERKELEY LABORATORY
FACILITIES DEPARTMENT

DRAWN BY	LSR	DATE 9/84
CHECKED BY	R.GRAZIER	9/84
APPROVED BY	BHS	9/84
CAD FILE PATH	00001936	
SCALE	NONE	
DRAWING NO.	4B71E086A	SHEET 1 OF 1
PROJECT NO.	153784	